New Jersey Institute of Technology
Digital Commons @ NJIT

Theses | Electronic Theses and Dissertations

10-31-1992

The design and manufacture of institutional trays using simultaneous engineering

Antonio Schmidt
New Jersey Institute of Technology

Follow this and additional works at: https://digitalcommons.njit.edu/theses

Part of the Manufacturing Commons

Recommended Citation

Schmidt, Antonio, "The design and manufacture of institutional trays using simultaneous engineering" (1992). *Theses*. 2340.
https://digitalcommons.njit.edu/theses/2340

This Thesis is brought to you for free and open access by the Electronic Theses and Dissertations at Digital Commons @ NJIT. It has been accepted for inclusion in Theses by an authorized administrator of Digital Commons @ NJIT. For more information, please contact digitalcommons@njit.edu.

Copyright Warning & Restrictions

The copyright law of the United States (Title 17, United States Code) governs the making of photocopies or other reproductions of copyrighted material.

Under certain conditions specified in the law, libraries and archives are authorized to furnish a photocopy or other reproduction. One of these specified conditions is that the photocopy or reproduction is not to be "used for any purpose other than private study, scholarship, or research." If a, user makes a request for, or later uses, a photocopy or reproduction for purposes in excess of "fair use" that user may be liable for copyright infringement,

This institution reserves the right to refuse to accept a copying order if, in its judgment, fulfillment of the order would involve violation of copyright law.

Please Note: The author retains the copyright while the New Jersey Institute of Technology reserves the right to distribute this thesis or dissertation

Printing note: If you do not wish to print this page, then select "Pages from: first page # to: last page #" on the print dialog screen

NJIT
New Jersey's Science &
Technology University

The Van Houten library has removed some of the personal information and all signatures from the approval page and biographical sketches of theses and dissertations in order to protect the identity of NJIT graduates and faculty.

THE DESIGN AND MANUFACTURE OF INSTITUTIONAL TRAYS USING SIMULTANEOUS ENGINEERING

by
William Antonio Schmidt

A Thesis
Submitted to New Jersey Institute of Technology
in Partial Fulfillment of the Requirements for the Degree of
Master of Science
Department of Manufacturing Engineering
October 1992

APPROVAL PAGE

Dr. Keith O'Brien, Thesis Adviser
Professor of Mechanical Engineering, NJIT

Dr.Nouri Levy, Associate Professor of
Mechanical Engineering, NJIT

Dr. George Lei, Associate Professor of
Chemistry, NJIT

ABSTRACT

THE DESIGN AND MANUFACTURE OF INSTITUTIONAL TRAYS USING SIMULTANEOUS ENGINEERING

by
William Antonio Schmidt

This study evaluates thermoformed trays as used in the food service industry. The resin used in fabricating trays is a blend of Acrylonitrile Butadiene Styrene (ABS) and Polycarbonate (PC). The life of the trays is presently between 1 to 3 years. The trays are used in correctional facilities and hospitals. The handling of the tray is not abusive. The trays are pulled out of service once they exhibit stress cracking.

To further understand the unpredictable life of the thermoformed trays an understanding of the behavior of the plastics is required and the method of comparing one resin from another, as used in industry. The actual process used in manufacturing the trays will also indicate where potential problems could cause failure in the trays. Most importantly, the environment, such as, exposure to solvents and boiling water is studied.

The most significant element that curtails the life of the trays is the solvent or rinsing agent used in the automatic dishwashers for cleaning the trays. Recycling of the ABS/PC blend could also cause premature failure in the trays.

BIOGRAPHICAL SKETCH

Author: William Antonio Schmidt

Degree: Master of Science in Manufacturing Engineering

Date: Ocotober, 1992

Undergraduate and Graduate Education:

- Master of Science in Manucturing Engineering, New Jersey Insistute of Technology, Newark, NJ,1992
- Bachelor of Science in Mechanical Engineering, New Jersey Institute of Technology, Newark, NJ,1986

Major: Manufacturing Engineering

This thesis is dedicated to
my wife Marina

ACKNOWLEDGEMENT

I would like to take this opportunity to thank Dr. Keith O'Brien, Professor of Mechanical Engineering of New Jersey Institute of Technology, for his valuable guidance throughout the course of this thesis work.

Table of Contents

1. POTENTIAL MATERIALS 1

1.1. Introduction 1

1.2. Plastics 1

1.2.1. Thermoplastic Polymers 2

1.2.1.1. Crystalline Polymers 4

1.2.1.2. Amorphous Polymers 4

1.2.2. Thermosetting Plastics 5

1.3. Molecular Orientation 5

1.4. Polymer Blends 7

1.5. Crystallinity 8

1.6. Acrylonitrile Butadiene Styrene (ABS) 8

1.7. Polycarbonate (PC) 9

2. STANDARD PHYSICAL TESTS 11

2.1. Introduction 11

2.2. Tensile Properties (ASTM D 638) 11

2.3. Flexural Properties (ASTM D 790) 14

2.4. Impact Resistance of Plastic (ASTM D 256) 17

2.5. Heat Deflection Temperature (ASTM D 648) 17

3. POTENTIAL PROCESSES 24

3.1. Thermoforming 24

3.1.1. Cut-Sheet Thermoforming 24

3.1.2. Continuous Web Thermoforming 24

3.1.3. Product Design 35

3.1.4. Thermoforming Complexity 35

3.1.5. Temperature 36

3.1.6. Vacuum 37
3.2. Extrusion 39
4. CHEMICAL RESISTANCE REQUIREMENTS 42
4.1. Solvent Resistance 42
4.1.1. Chemical Reaction 42
4.1.2. Solvation, Absorption, and Plasticization 42
4.1.3. Stress Cracking 42
4.2. Rinsing Agents 43
4.2.1 Rinsing Agent Evaluation 43
4.3. Hot Water Aging of Polycarbonate 44

5. RECYCLING ABS/PC BLEND 51
5.1. Regrind 51
5.2. Properties 51
6. DISCUSSION 57
6.1. Resin Comparative Analysis 57
6.2. Process Evaluation 58
6.3. Environment 58
7. CONCLUSIONS 61
REFERENCES 64

LIST OF TABLES

Table **Page**

1.1 Strength of hydrogen bonds 3

1.2. Strength of primary chemical bonds 3

1.3. Examples of secondary bonding forces 3

1.4. Hierarchy of plastics 10

2.1. Tensile strength 12

2.2. Flexural strength 16

2.3. Notched Izod Impact 21

2.4. Heat deflection temperature 22

3.1. Thermoforming processing temperatures 38

3.2. Vacuum pressures 40

3.3. Atmospheric Pressures 40

6.1. Comparison Table of ABS/PC, PC and ABS 60

LIST OF FIGURES

Figure **Page**

1.1. Van der Waals Bond 2

2.1. Stress/Strain Relationship..... 13

2.2. Yield Point Determinants..... 15

2.3. Flexural Properties 18

2.4. Sketch of Izod Impact Test..... 20

2.5. Heat Deflection Test 23

3.1. Plug Assist Forming..... 25

3.2. Vacuum Forming 26

3.3. Drape Forming..... 27

3.4. Trapped Sheet Forming..... 28

3.5. Snap Back Forming 29

3.6. Slip Forming 30

3.7. Plug and Ring Forming..... 31

3.8. Reverse Draw with Plug Assist..... 32

3.9. Reverse Draw on a Plug..... 33

3.10. Dual Sheet Forming 34

3.11. Schematic of Extruder 41

4.1. Water Sorption of PC..... 46

4.2. Differential scanning calorimetry (DSC) of samples in boiling water ... 47

4.3. Polycarbonate samples in boiling water for 8 and 5 days..... 48

4.4. Tensile Strength of Polycarbonate samples in boiling water 49

4.5. Polycarbonate samples in water, strain curve 50

5.1. Ductility, measured as elongation at break..... 53

5.2. Tensile strength of ABS, PC and Bayblend..... 54

5.3. Notched Izod Impact strength of ABS, PC, and Bayblend 55

5.4. Melt Flow Indices of ABS, PC, and Bayblend..... 56

6.1. Thermoformed Tray, as used in hospitals and correctional facilities.... 59

7.1. Stress cracking in tray..... 63

CHAPTER 1
POTENTIAL MATERIALS

1.1 Introduction

Plastics have been used to produce various consumer goods, more than 60,000,000 metric tons are consumed annually in the United States. Plastic is mostly extruded into sheets, film and tube, to be used in disposable markets such as food packaging, bottles, hangers and pipes.

Plastics have been used for over a hundred years. One of the earliest uses of plastic was cellulose nitrate, as a substitute for ivory in billiard balls(1). Phenolic compounds were used as early as 1909 for telephones and distributor caps (1). After World War II, many new polymers were developed, mostly commodities resins. Since then many new high performance resins have been developed.

Commercial thermoplastics are classified into four groups: Commodity, Intermediate, Engineering, and Specialty. The differences between each group are the mechanical properties, impact strength, heat resistance to chemicals and solvents, and most importantly cost. Table 1.4 lists some resins from each group with their costs. The higher the cost the better the resins properties.(1)

1.2 Plastics

The American Society for Testing Materials defines plastics as" a material that contains as an essential ingredient an organic high molecular weight polymers, is solid and rigid in its finished state, and at some stage is in its manufacture or its processing into a finished article, can be shaped by flow".(12)

The term polymer means many call "mers" or units. They consists of high molecular weight molecules. The term plastic and polymer are interchangeable, but polymers can also be inorganic ceramics, waxes, rubbers, and natural substances such

as cotton, wool, linen, silk, lacquer, and gum. The difference, as stated by the definition of plastic, is that it must be high molecular weight. Waxes are low molecular weight. Rubbers, both natural and synthetic, are high polymers with repeating molecular structure but by definition due to there lack of rigidity they are not considered plastics. Ceramics also have repeating mers, but are inorganic, Plastics do use inorganic, low molecular weight ingredients, but only as additives to improve properties, color, or enhance process.

There two types of plastic, thermoplastics and thermosets. The differences are the monomers, the polymerization processes, the molecular structures and the bonding systems within the molecule.

1.2.1 Thermoplastic Polymers

Thermoplastics are linear polymer formed by addition and condensation polymerization. The bonding within the molecule is covalent, and the bonding between the molecules is by a secondary force.

Figure 1.1 Van der Waals Bond

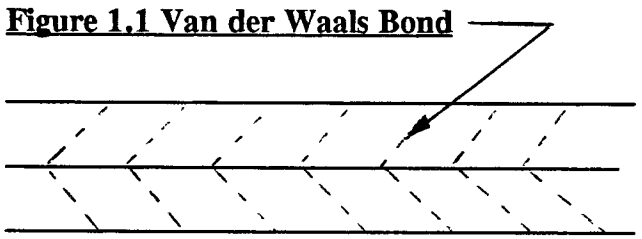

Thermoplastic secondary force's attraction can be broken by heating, causing melting. Once it cools the secondary forces reestablishes itself.

The weakest attractive forces exist between hydrocarbon chains such as polyethylene. Much stronger bonds, such as hydrogen bonds, as shown on table 1.1, are produced between dissimilar polar groups, such as nylon.

Table 1.1 STRENGTHS OF HYDROGEN BONDS

BONDS	DISSOCIATION ENERGY (KCAL/MOLE)
N-H---N	3 TO 5
N-H---O	4
N-H---O	3 TO 6

Table 1.2

STRENGTH OF PRIMARY CHEMICAL BONDS

BONDS	DISSOCIATION ENERGY (KCAL/MOLE)
C-C	83
C=C	146
C-H	99
C-N	73
C≡N	213
C-O	86
C=O	179
C-CL	81
N-H	93
O-H	111
C-F	103 TO 12

Table 1.3
EXAMPLES OF SECONDARY BONDING FORCES

TYPE	DISSOCIATION ENERGY (KCAL/MOLE)
IONIC BONDING	10 TO 20
HYDROGEN BONDING	3 TO 7
DIPOLE INTERACTION	1.5 TO 3
VAN der WAALS	.5 TO 2

Secondary bonding forces are smaller than the primary covalent bonds between individual atoms, as shown on tables 1.2 and 1.3. Upon heating the polymer secondary forces would break rather than the covalent bonds. The breaking of the secondary bonds would allows the polymer molecules to move under stress.

A very high secondary bonding force, such as Ionic Bonding, when heated would result in a high viscosities and melting difficulties, because the high secondary forces would prevent the polymer molecules from moving with ease under stress.

Thermoplastics are either crytalline or amorphous.

1.2.1.1 Crystalline Polymers

Highly crystalline polymers may have a sharp melting point. Their melting point is at the same as their forming temperature. They have ordered structure with the following characteristics:

1 -Rigidity

2 - Low friction

3 - Hardness

4 - Resistance to environmental stress cracking

5 - Can be effectively reinforced

6 - Ability to be stretched

7 - Greater creep resistance

1.2.1.2 Amorphous Polymers

Are polymers that do not form a dense crystalline structure. They have a small degree of crystallinity when the plastic is in the solid form. For example, PVC is classified as an amorphous polymer but crystallinities of up to 6 or 7 percent by mass have been reported in literature, making it partial crystalline. Amorphous polymers do not shrink

as much as crystallinity polymers. In other words, the specific volume doesn't change as much from the melt phase to room temperature, as crystalline polymers do.

1.2.2 Thermosetting Plastics

Thermosetting polymers are hard, strong, rigid and have good heat resistance. The branching networks are called crosslinks. Its molecular forces are covalent bonds. If the chain is broken or the covalent bonds break the polymer has experienced degradation.

1.3 Molecular Orientation

The way the basic molecular unit or mer repeats itself with respect to the backbone may greatly influence the properties of the polymer. There are three possible ways or stereosmerism into which molecular groups can be arranged with respect to the backbone:

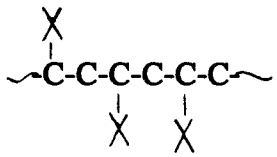

Atactic polypropylene, typical segment of the polymer chain

<u>Atactic</u> A random arrangement of the unsymmetrical group along the backbone

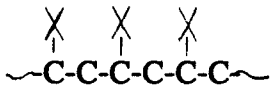

Isotactic polypropylene, typical segment of the polymer chain

<u>Isotactic</u>- The group of atom located on one side of the backbone

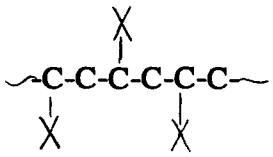

Syndiotactic polypropylene, typical segment of the polymer chain

<u>Syndiotactic</u> - Alternating the group on one side to the other along the backbone

The polymerization process influences stereismerism arrangement of a linear polymer molecule.

Monomer - The building block of a high polymer. Only one mer repeating

Copolymer - a mixture of two distinct mer units forming the molecule

Terpolymer - Three different mer units forming the linear molecule.

The polymer can have a random mixture or an orderly arrangement of the different monomers.

<u>Monomer</u>

A

B

~AAABABA~

Random Copolymer

~ABABABAB~

Alternating Copolymer

~AAAABBBBB~

Block Copolymer

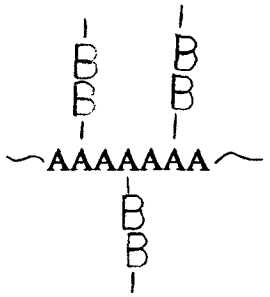

Grafted Copolymer

Each type of polymer has different properties. Many types of copolymers and terpolymers have been developed to combine the best features of two or more monomers. This type of control of the process by the chemist has given them the ability to design polymer to fit the customers need.

For instance, polystyrene is a low cost and clear, but is very brittle. By copolymerizing with small amounts of acrylonitrile or butadiene, the impact properties can be improved.

ACRYLONITRILE + STYRENE = ACRYLONITRILE STYRENE COPOLYMER (SAN)

1.4 Polymer Blends

The reasons for combining two or more polymers to form a Copolymer are as follows:

1 - Property Combination, to obtain a desired physical property .

2 - Cost Dilution, using a small quantity of a desired polymer combine with a lower cost polymer will achieve desire characteristics but at a lower cost.

3 - Synergistic Effects, particular properties of the blend will be greater than the property of the individual polymers forming the blend.

1.5 Crystallinity

Thermoplastic can never fully crystillize as metals do, because they cannot fully align every portion of the chain when they crystillize. The chain becomes interlock with itself. This results in thousands of grouped island of crystalline region, surrounded by unordered or amorphous material. Crystallinity is started by the attraction of its molecules.Linear polymers will crystallize more than branched molecules
Linear polymers will crystallize more than branched molecules

1.6 Acrylonitrile Butadiene Styrene (ABS)

ABS has been commercially used as early as 1940s. Presently, sales in ABS are in the 1.2 billion lbs and GE Plastics expect a demand will increase at 3 to 5 % rate in the US. over the next few years. In Europe, GE stated that the growth rate is about the same as in the US., but in the Pacific region they expect the growth rate to be between 7 to 10% (11).

ABS is considered to be between a commodity plastic and an engineering plastic. It is made up of three building blocks: acrylonitrile, butadiene, and styrene.

Acrylonitrile= Offers chemical resistance and heat stability

Butadiene= Delivers toughness and impact strength

Styrene= Gives rigidity and processability

By altering the ratios of the three monomers and adding additives manufacturers can obtain desirable properties to meeting the customers needs. ABS has the ability to be blended with a variety of polymers, producing a range of alloys that offer desirable properties. The most common blend is ABS with polycarbonate (PC). This combination gives improved impact and higher heat resistance. ABS/PC is mostly used in the automotive industry for bumpers and dashboards.

The versatility of ABS enables it to be processed by injection molding, blow molding, thermoforming, sheet extrusion, and profile extrusion. Since ABS is not limited by one process it can be used in different markets, such auto industry, business equipment, food service trays and refrigerator door, toys, appliance housing, and drain pipes

1.7 Polycarbonate (PC)

PC is an amorphous engineering thermoplastic. It has excellent toughness, clarity and high-heat deflection temperature. PC is primarily used in the automotive, business machines and appliance markets. The growth rate of PC has been 10 % a year. It is considered to be one of the most durable plastics. But it does have its limitations. Since it is an engineering plastic, the cost is much higher than the commodity thermoplastic. PC cannot withstand high temperatures with high humidity for long periods of time. It degrades when subjected to solvents and chemicals.

PC is hygroscopic material and at ambient conditions can reach an equilibrium of .35% moisture. This level of moisture must be reduced to less than .02% prior to processing, to avoid molecular weight degradation and loss of toughness. Since PC is a hygroscopic material it must be dried for at least four hours at 250 degrees F. at a very low dew point to obtain a level of .02% of moisture.(2)

The main reason for the 10% annual growth of PC is due to new applications. For example, it is blended with other thermoplastics to obtain desired characteristics. PC is constantly continuing to replace materials such as metal, glass and wood. It has a broad range of applications: Automotives, maker lights, instrument panels, Sheet (glazing), Business machines, lighting, appliances, compact discs, sporting equipment, display signs, aircraft parts, light pipes, and medical applications.

Polycarbonate is produced by Dow Chemical (Calibre), G E Plastics (Lexan), and Mobay Corporation (Makrolon).

Table 1.4 Hierarchy of plastics
(Modern Plastic 1989 and Plastic News, February 1992)

THERMOPLASTICS

		COST (cents/lb)
Commodity		
	Low-Density Polyethylene (LDPE)	37-43
	Polypropylene homopolymer (PP)	45-49
	Polystyrene (PS)	51-43
	Rigid Polyvinyl chloride (PVC)	25-26
Intermediate		
	Polymethyl Methacrylate (PMMA)	
	Acrylonitrile Butadiene Styrene (ABS)	103-136
	Cellulose Acetate Butyrate (CAB)	
	Thermoplastic Olefin Elastomer (TPO)	Phenolic
	Melamimes	
	Styrene Acrylonitrile (SAN)	
	High impact polystyrene (HIPS)	
Engineering		
	Acetal (polyoxymethylene)	168-179
	Nylon-6/6, Nylon 6	181-183
	Polycarbonate (PC)	154-159
	Polyphenylene sulfide (PPS)	163-184
	Polybutylene terephthalate (PBT)	
	Polyethylene naphthalate (PEN)	
	Polysulfone (PSO)	
Specialty		
	Liquid-crystal polyester	310
	Polytetrafluoroethylene (PTFE)	
	Polyetheretherketone (PEEK)	2000
	Polyethersulfone (PES)	440-470
	Polyetherimide	

CHAPTER 2
STANDARD PHYSICAL TESTS

2.1 Introduction

The test described below are some of the results listed on property information sheets given by the resin manufacturer. A complete information on all tests performed on plastics can be obtained by "ASTM Standard on Plastics" book, which is available from the American Society of Testing Materials, 1916 Race Street, Philadelphia, PA.

2.2 Tensile Properties (ASTM D 638)

Determines the material behavior when subjected to forces that tends to pull apart. The behavior found in this test is tensile strength. The Tensile Strength is used to rank polymers as shown in table 2.1. This test does not take in consideration the effects of temperature on the plastic sample. At high and low temperatures the Tensile properties will differ greatly.

The sample used in this test is 8.5" long with a center section of 2.25 long, with constant cross-sectional dimensions of .25". The sample is tested in a machine called Instron, a universal testing machine used for this purpose. One jaw is held stationary and the other is in movable crosshead. The sample according to ASTM D 638, must be subjected to a constant rate of crosshead movement (.2, 2.0 or 20 in per minute) depending upon the type of plastic test. A 2" center section length is marked with a wax pencil on the sample. The marks are called " gauge Marks ". The area between the gauge marks is what is being tested. As the sample is pulled, two properties will be measured: Tensile Stress and Tensile Strain, as shown in figure 2.1.

<u>Tensile Strain</u> is the strength of the pull within the area between the gauge marks, based on the original cross- sectional area. The measurement are taken as lbs/in sq.

<u>Tensile Strain</u> is measure of how much the sample has been stretched by the pull.

Table 2.1 Tensile strength

(Selecting Thermoplastic for Engineering Applications)

Tensile strength, Kpsi (ASTM D 638)	**Resin**
22.3	Polyethlene terephthalate (30% glass)
20.0	6/6 nylon (50%RH) (30% glass)
19.0	Polycarbonate (30% glass)
17.3	Polybutylene terephthalate (30% glass)
17.0	PPE based resin (30% glass)
11.2	6/6 nylon (50% RH)
10.3	Polysulfone
10.0	Acetal
9.6	6/6 nylon
9.0	Polycarbonate
8.8	6 nylon (50% RH)
7.5	6/6 nylon (50% RH) (super tough)
5.0	ABS
4.6	Polypropylene (40% talc filled)

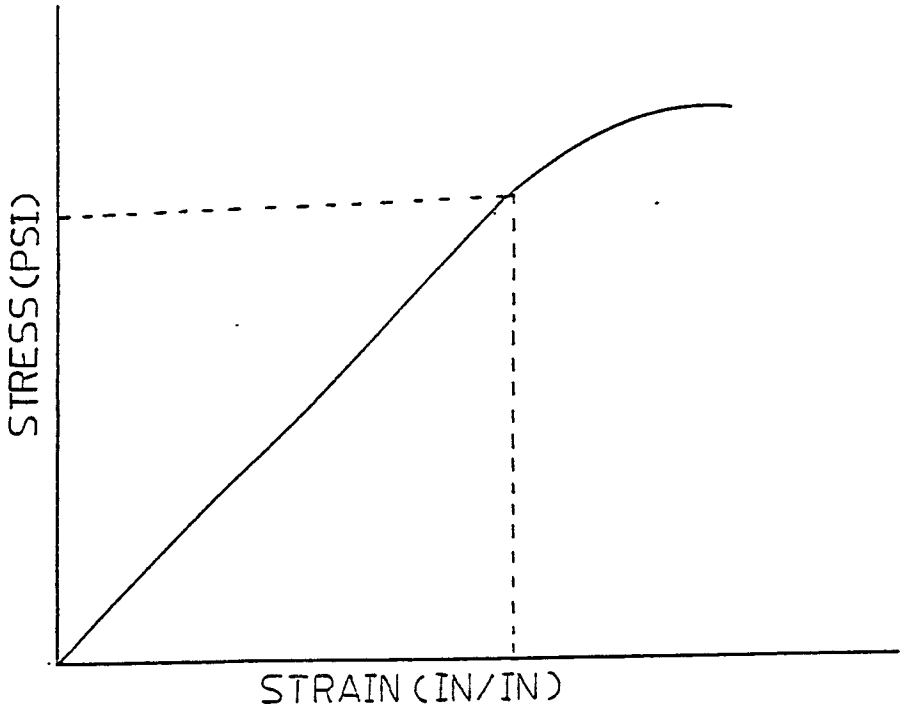

Figure 2.1 Stress/Strain Relationship

The measurement is taken between the two gauge marks. The strain is a ratio of how much the sample stretches, compare to the original size (in/in), therefore, it becomes dimensionaless units.

The ratio of Tensile Stress to Tensile Strain is called Tensile Modules.

A Yield Point is reached when the sample elongates with no increase in strength of pull. At the Yield Point, the sample is permanently deformed by the elongation.

In figure 2.2 material A represents a curve without a Yield Point, such a material would be an acrylic resin. Material B does have a Yield Point. The end of each curve, A and B, represents the breaking point for each of the samples.

2.3 Flexural Properties(ASTM D 790)

Measures the stress that it requires to break a material. The value obtained from the test is not to be used for designed purposes. It is just used to compared the strength of one resin to another as shown on table 2.2.

ASTM D - 790, gives us 2 properties Flexural Modulus and Flexural Strength. These properties are found by applying a load on a sample which will cause bending or flexing as shown on fig 2.3. The sample size, as suggested by ASTM 790, is a 1/2 x 1/8 bar with 2 in span. The rate of motion of the load should be .05 in/min. An Instron testing machine is used in this test. The force required to bend the rod and the amount of deflection is recorded. Flexural Strength- The stress under which will break the sample by bending.

Maximum stress = 3PL/2bdd

P = load (lbs)
L = length of span (in)
b = width of sample (in)
d = thickness of sample (in)

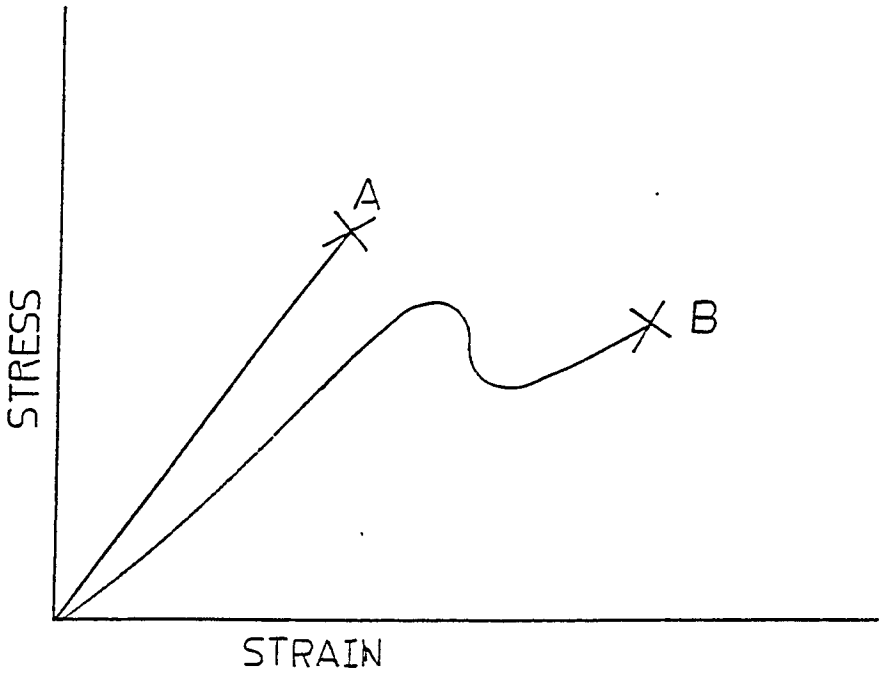

Figure 2.2 Yield Point Determinants

Table 2.2 Flexural strength
(Selecting Thermoplastic for Engineering Applications)

Flexural strength, K psi (ASTM D 790)	Resin
33,500	Polyentylene terephthalate
26,000-29,000	Polybutylene terephthalate
23,000	Polycarbonate
20,000-23,000	PPE based resin
21,000	6/6 nylon (50% RH)
15,400	Polysulfone
13,500	Acetal
13,500	Polycarbonate
13,000	PPE based resin
12,000	ABS
9,000	6/6 nylon (50% RH) (mineral reinforced)
9,000	Polypropylene (40% talc filled)
6,100	6/6 nylon (50% RH)
5,000	6 nylon (50% RH)

Flexural Modulus- Measures the stiffness during the initial bending. Flexural modulus of elasticity or simply modulus. It is calculated by making a graph of the data determined from the test, a stress and strain curve.

L = length of span
d = Thickness of sample
D = deflection

The modulus is represented by the slope of straight-line- line portion of the curve. The higher the slope the higher the stiffness.

2.4 Impact Resistance of Plastic (ASTM D 256)

Izod impact test measures the energy required to break a notched specimen under standard conditions, as shown in figure 2.4. The test bar measures 2-1/2 x 1/2 x 1/8 and is notched across one edge.

The Izod value is useful in comparing various types or grades of plastics (see table 2.3). It should not be used to measure overall toughness, because some resins are notch- sensitive. The Izod test may indicate the need for avoiding sharp corners in parts made of such resin.

Impact = Energy absorb to break / Area at notch section

Sharp notch = .25 mm radius

Blunt notch = 2 mm radius

2.5 Heat Deflection Temperature (ASTM D 648)

Measure stiffness of plastics at high temperatures, for the purpose of resin comparison, see table 2.4. The heat deflection test takes place in a bath of oil. The oil is heated at a constant rate of 3.6 deg F/min. The test ends when the sample has bent .01 in. The

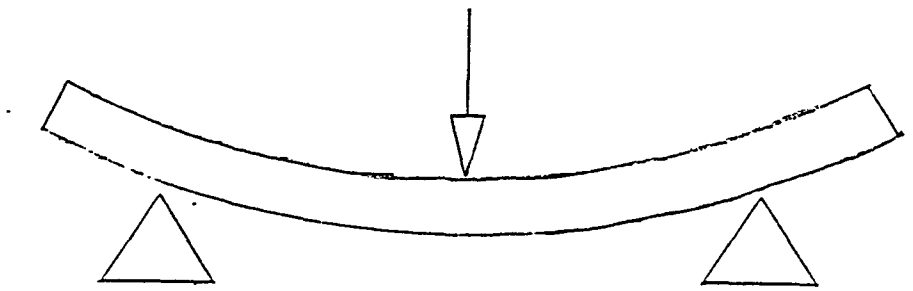

STRESS / STRAIN FORCES ON SAMPLE
FOR FLEXURAL PROPERTIES TEST

Figure 2.3 Flexural Properties

test is performed at load of 264 psi and at a load of 66 psia, as shown in figure 2.5. This test is used in the plastic industry to compare one resin from another in their physical response to temperature at a single load

This test is not considered to be an accurate way of measuring heat deflection. Since .01 is in reality a small deflection. Also, the sample may deflect from stress relief when the sample is being heated. This will give misleading readings. Inspite of these short comings it is still used as a guide in selecting engineering plastics.

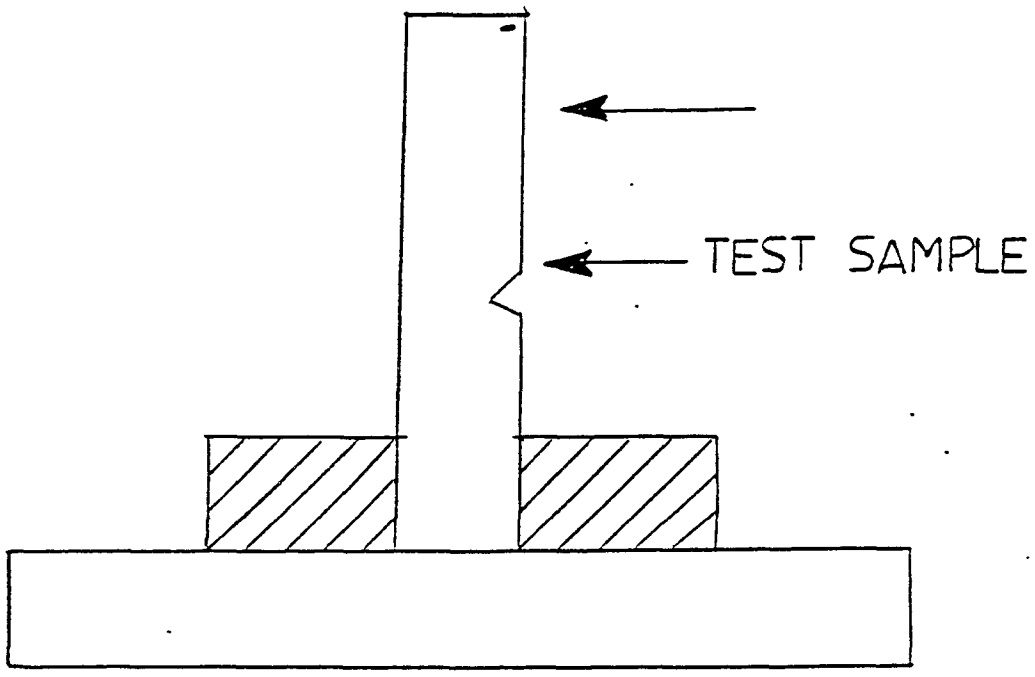

Figure 2.4 Sketch of Izod Impact Test

Table 2.3 Notched Izod Impact
(Selecting Thermoplastic for Engineering Applications)

NOTCHED IZOD at 73 degs F (ASTM D-256)	Resin
40.	6/6 nylon (5% RH) (super tough)
15.	Polycarbonate
6.0	ABS
5.0	PPE- based resin
2.6	6/6 nylon (59% RH)
2.3	PPE- based resin (30% glass)
2.0	Polycarbonate (30% glass)
2.0	6/6 nylon (50% RH) (30% glass)
1.9	Polyethylene terephthalate (30% glass)
1.8	Polybutylene terephthalate (30% glass)
1.4	Acetal
1.4	Polysulfone
1.0	6/6 nylon (50% RH) (mineral reinforced)

Table 2.4 Heat Deflection Temperature
(Selecting Thermoplastic for Engineering Applications)

HDT, Fdegs @ 264 psi

(ASTM D 648)	**Resin**
485	6/6 nylon(50% RH)
446	6/6 nylon(50% RH) (mineral reinforced)
435	Polyethylene terephthalate (30% glass)
405	Polybutylene terephthalate (30% glass)
345	Polysulfone
300	PPE based resin (30% glass)
295	Polycarbonate (30% glass)
277	Acetal
270	Polycarbonate
265	PPE based resin
216	ABS
194	6/6 nylon (50% RH)
170	6 nylon (50% RH)
170	Polypropylene (40% tac filled)
159	6/6 nylon (5% RH) (super tough)

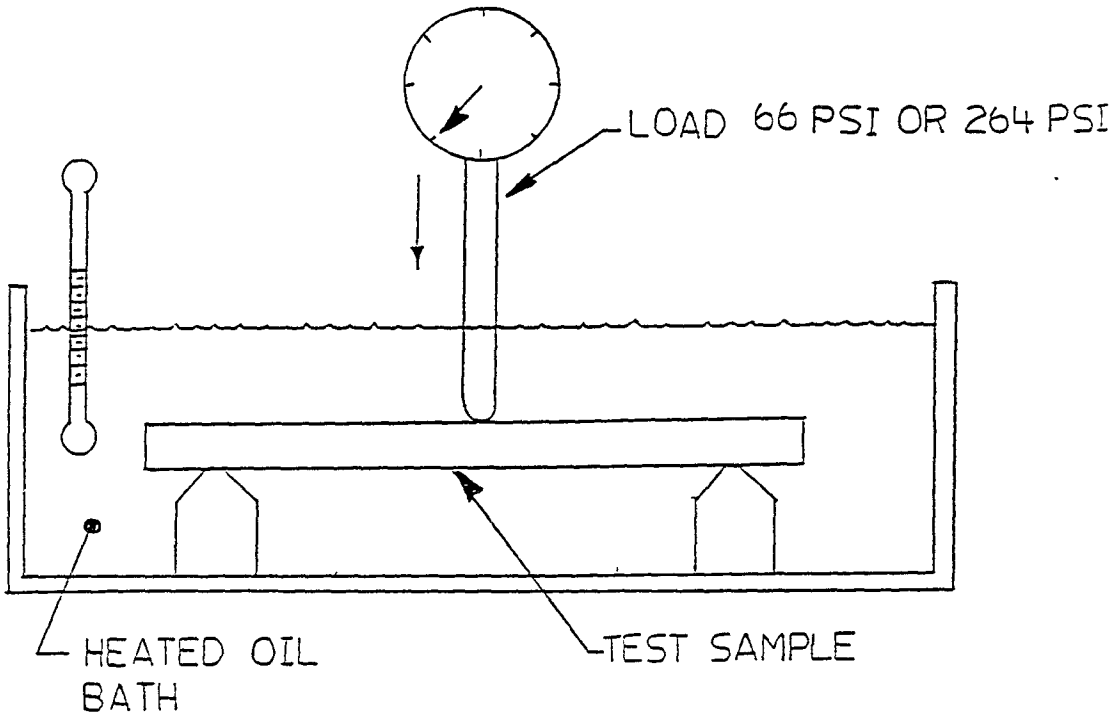

Figure 2.5 Heat Deflection Test

CHAPTER 3
POTENTIAL PROCESSES

3.1 Thermoforming

It is one of the more recent methods of processing plastic parts. It requires simple tooling and equipment to make a part. Custom work is practical in terms of time, material, and tooling costs, and the process is also suited too high - volume mass production.

Thermoforming is a two step operation. First a sheet of thermoplastic material is heated until it becomes soft to a workable temperature for forming. The second step is the actual forming of the part through any one of several techniques as shown on figures 3.1.to 3.10.

Thermoforming can be divided in to two groups; Cut- sheet Thermoforms and Continuous Web Thermoformers.

3.1.1 Cut-Sheet Thermoforming

It is normally used for producing sample parts or used in a lab. But there are others cut sheet thermoformers for production runs, such as the cut-sheet multi station rotary systems. A Precut sheet is placed in a station that will rotate to another station where the sheet will be heated than transfer to another station where it will be formed. At the last station the part is removed. At this point the initial sheet has made a full circle around this rotary system. The Precut thermoplastic sheets are usually preheated in an oven before they placed in the rotary station.

3.1.2 Continuous Web Thermoforming

This system uses a roll of thermoplastic sheet in which the material is pinned or guided by some other mechanism into a heat oven. At a predetermined lapse time the continuous sheet will be indexed out of the oven into a forming section. After the

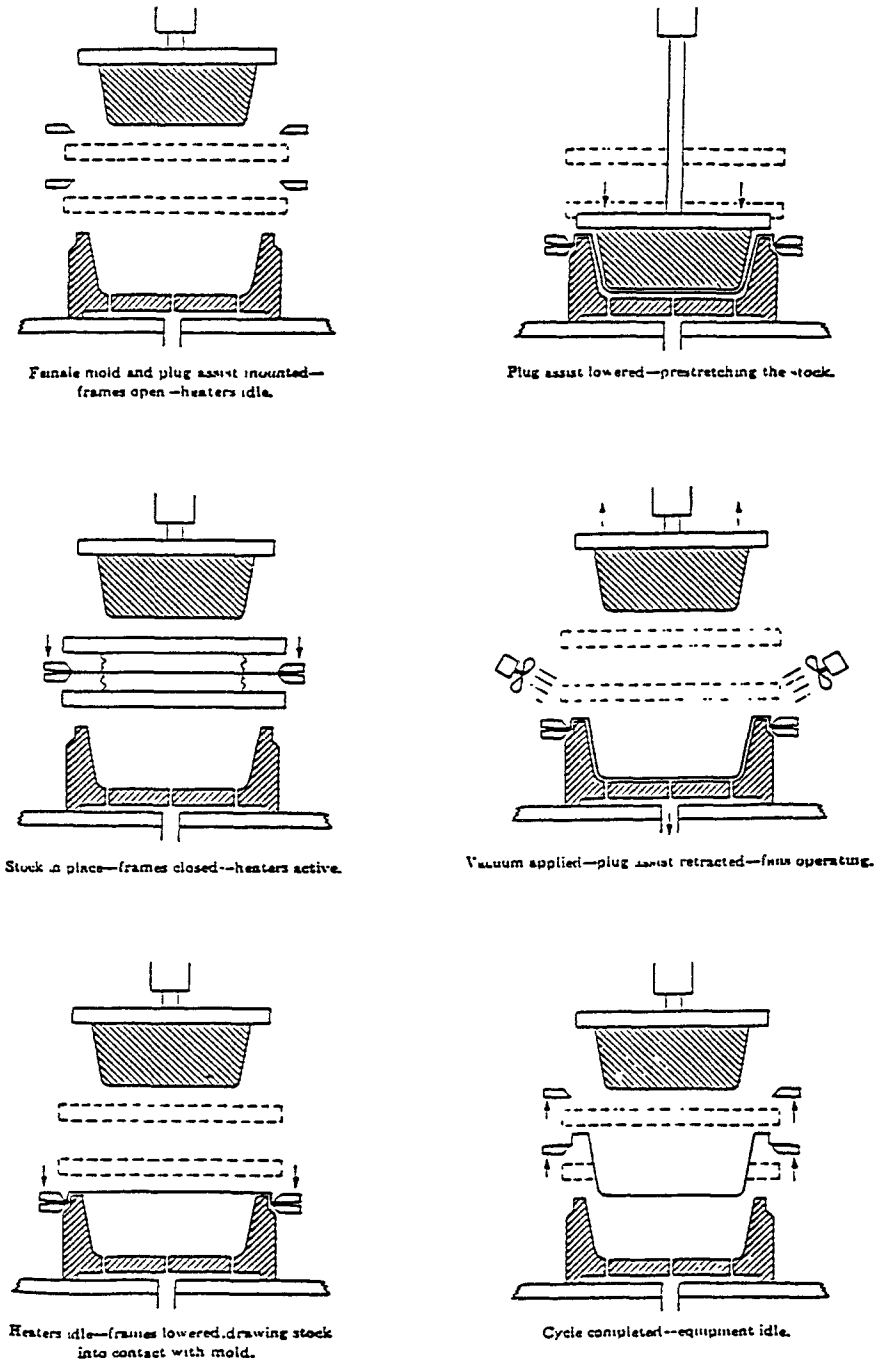

Figure 3.1 Plug Assist Forming
(Courtesy of Society of Plastic Industry)

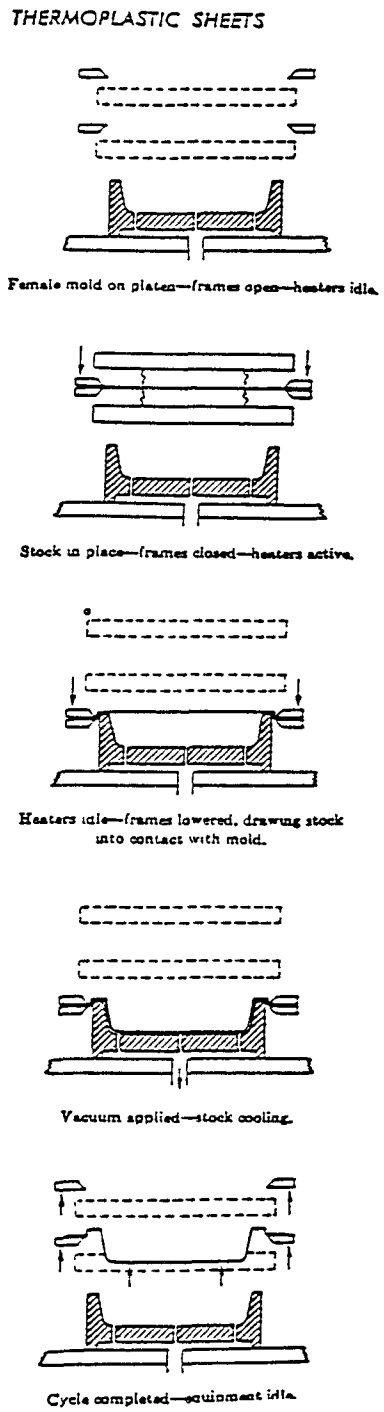

Figure 3.2 Vacuum Forming
(Courtesy of Society of Plastic Industry)

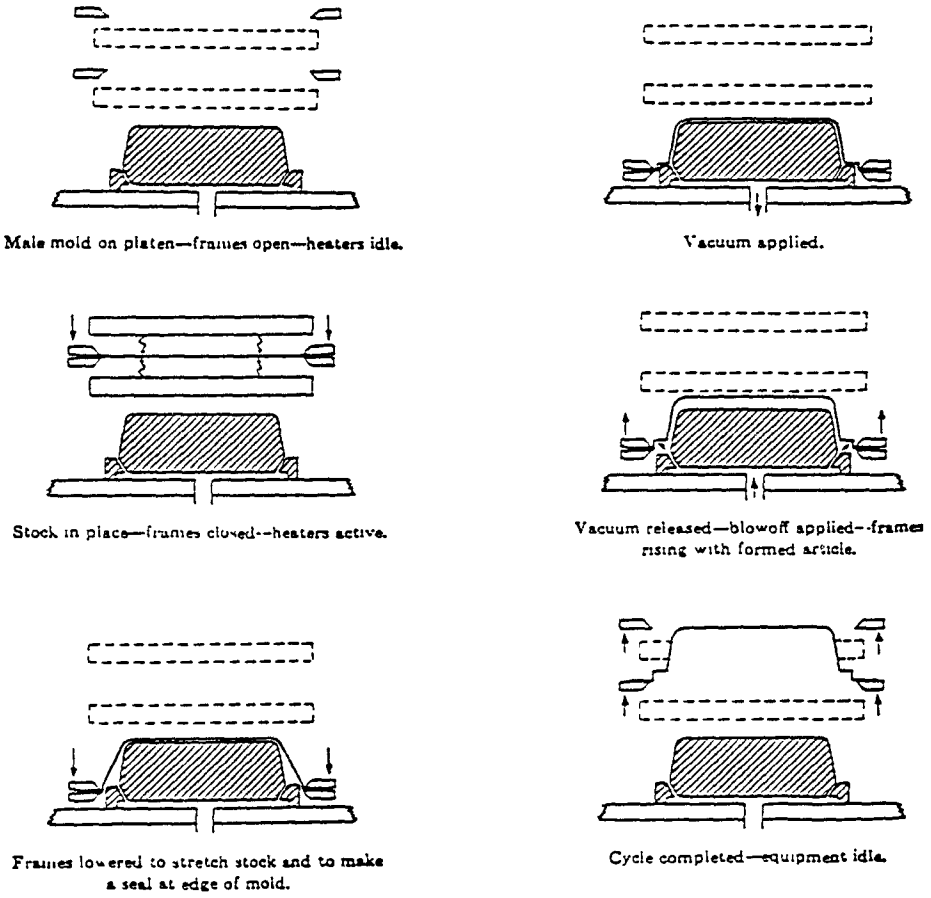

Figure 3.3 Drape Forming
(Courtesy of Society of Plastic Industry)

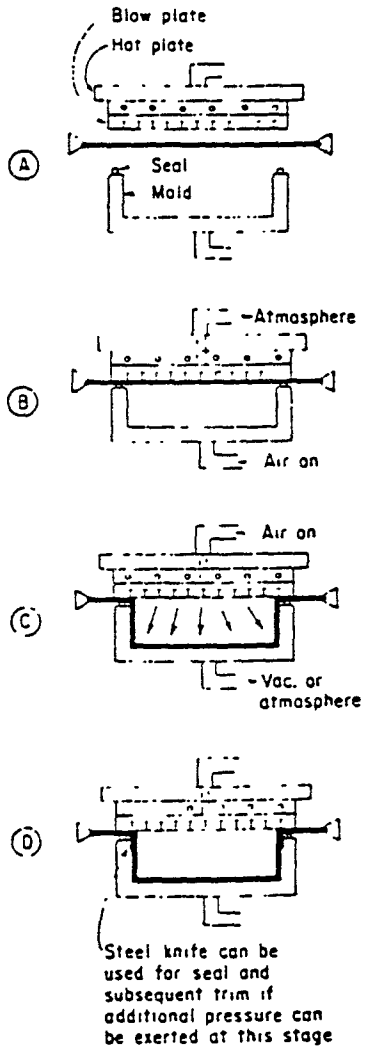

Figure 3.4 Trapped Sheet Forming
(Courtesy of Society of Plastic Industry)

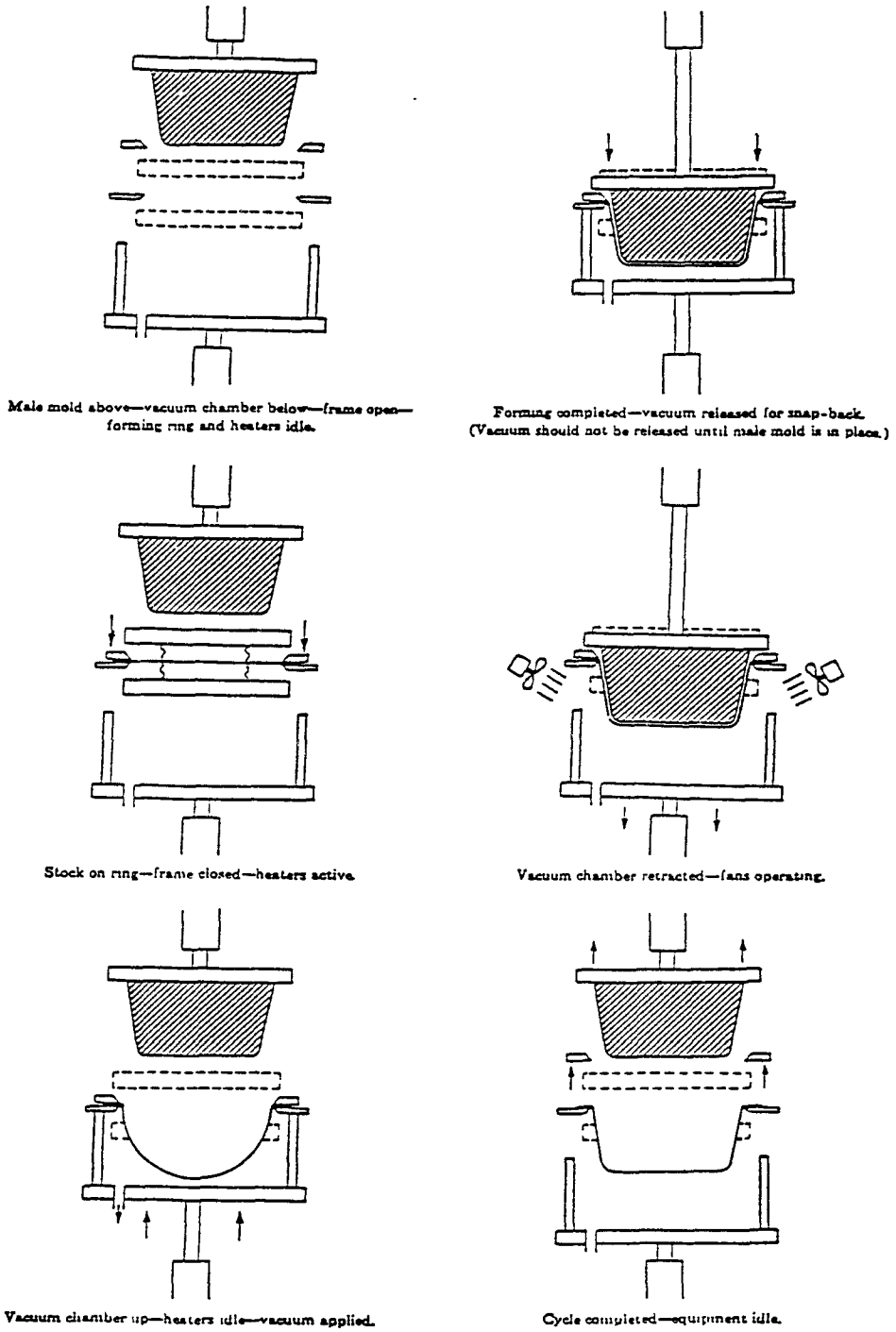

Figure 3.5 Snap Back Forming
(Courtesy of Society of Plastic Industry)

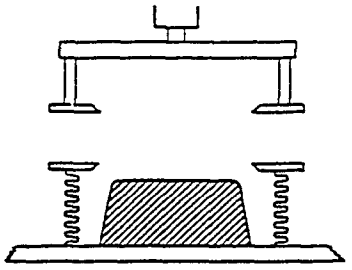

Male mold on platen—spring-loaded pads open—forming ring with risers above.

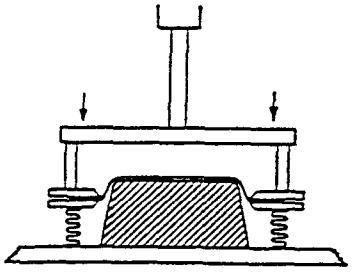

Stretching in progress—stock slipping inward.

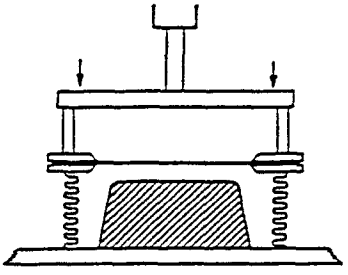

Stock in place—ring moving downward.

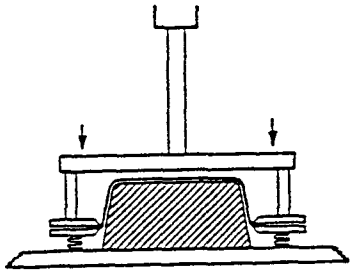

Forming completed—stock slipped to optimum.

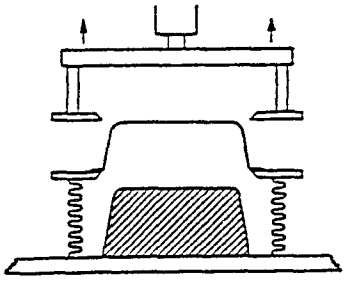

Cycle completed—equipment idle.

Fig. 13-11a. Slip forming.

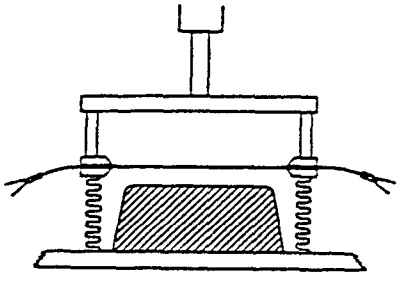

Variation: narrow ring- -clips to restrict slippage

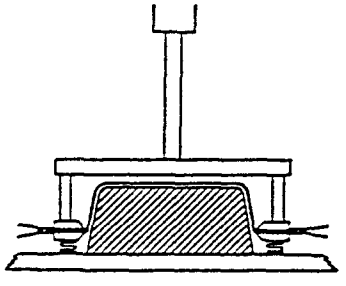

Forming completed—clips against ring.

Figure 3.6 Slip Forming
(Courtesy of Society of Plastic Industry)

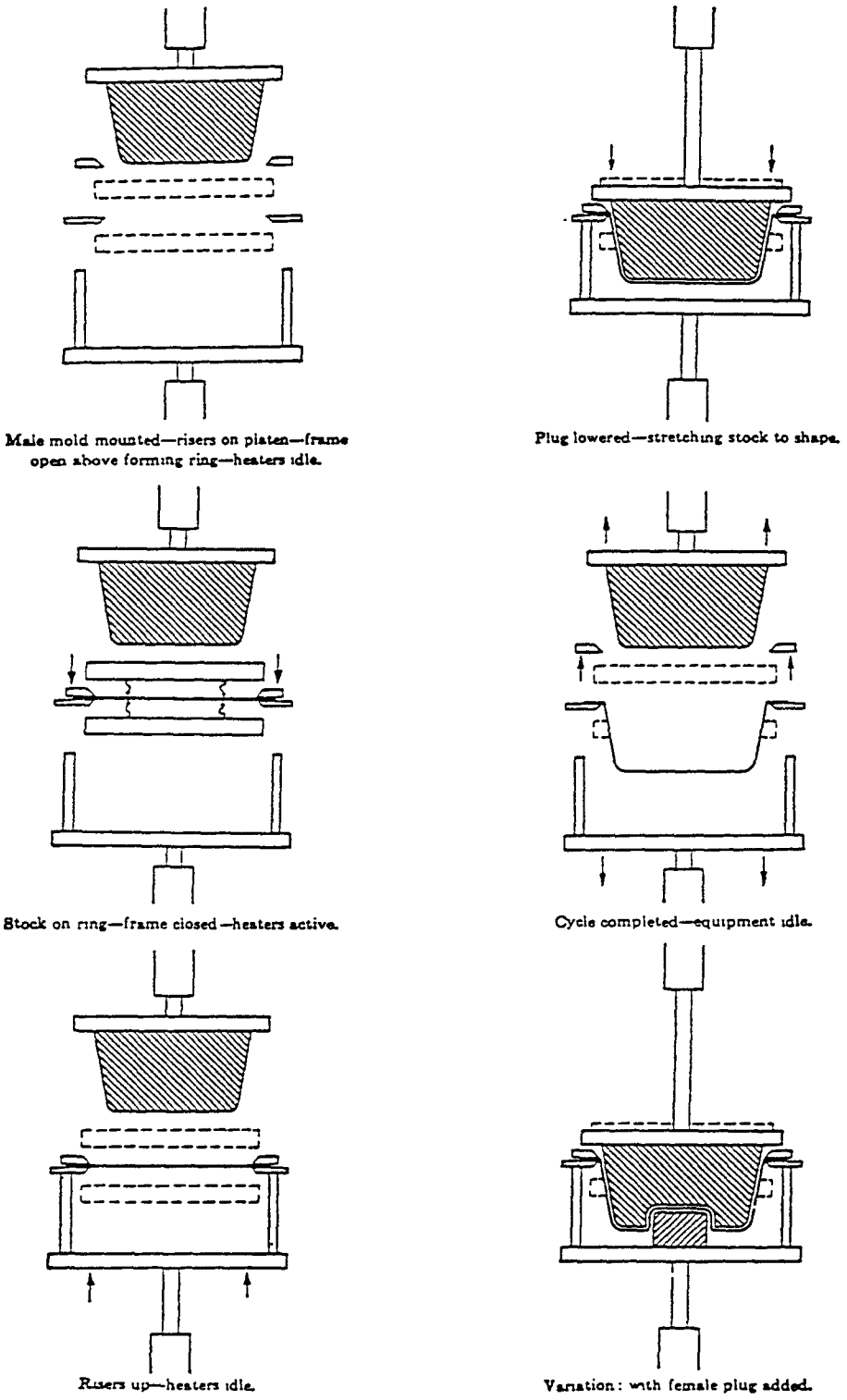

Figure 3.7 Plug and Ring Forming
(Courtesy of Society of Plastic Industry)

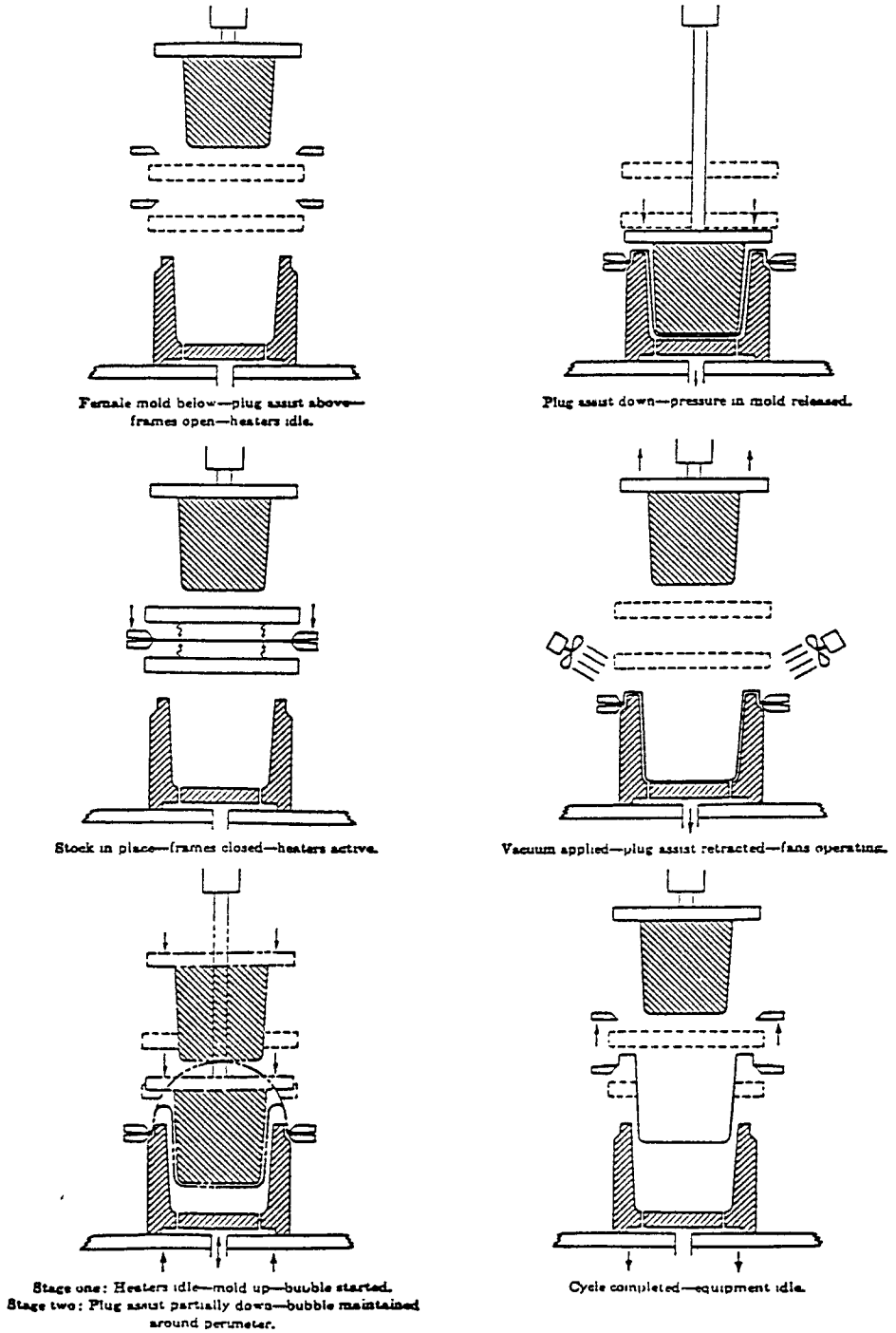

Figure 3.8 Reverse Draw with Plug Assist
(Courtesy of Society of Plastic Industry)

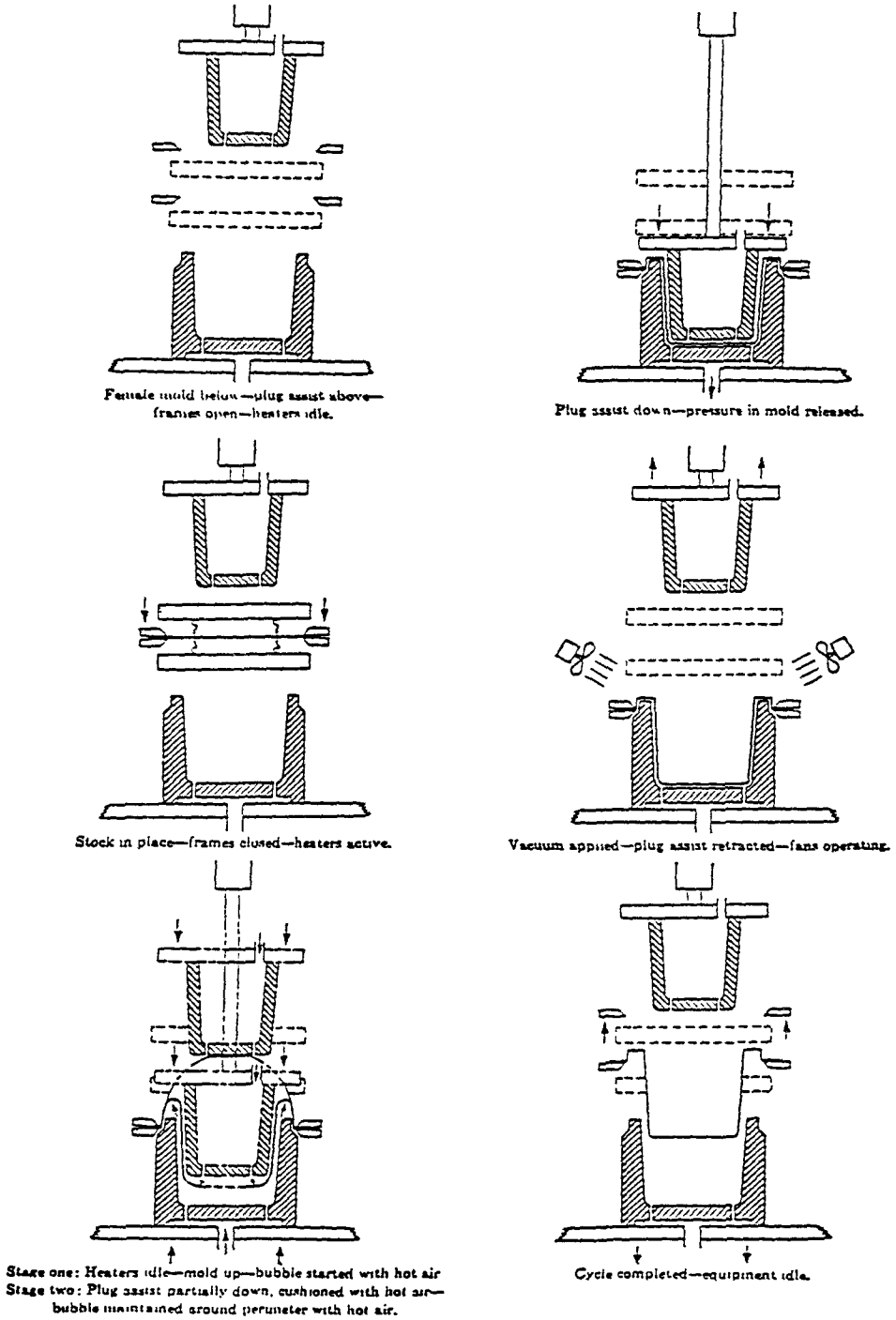

Figure 3.9 Reverse Draw on a Plug
(Courtesy of Society of Plastic Industry)

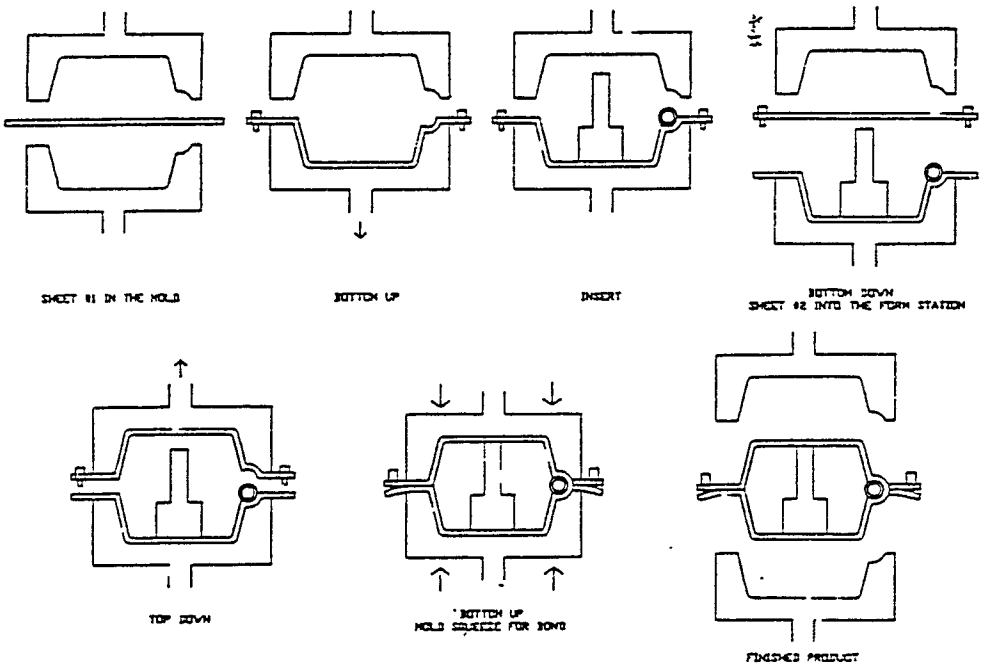

Figure 3.10 Dual Sheet Forming
(Courtesy of Society of Plastic Industry)

forming has been completed the thermoformed sheet will go into a trimpress were the parts are punched out. All this will happen continuously. Web thermoforming is used in high-volume production.

3.1.3 Product design

Solid shapes cannot be produced by thermoforming process. Since a heated sheet is stretched over a form or mold, the plastic will be thinner after the process. In stretching, it is necessary for one side of the sheet of plastic to stretch more than the other side. This means that very heavy sheets cannot be used because of shrinkage from one side to the other. Except for special application, maximum sheet thickness is usually one-quarter of an inch.

In stretching, the plastic sheet tends to bridge across fine details in the form. The thickness of the sheet determines the amount of detail produced. With thin sheets (.002 to .020) very fine surface details is possible.

Design usually should not call for sharp corners. The plastic tends to thin excessively or to tear in such places. Deep depressions of small diameters are difficult to produce. Large radii smooth curved shapes are easiest to produce. Design should not call for large flat areas. The formed part is likely to lack flexural strength. It is preferable, where a large area is needed, to form ribs forms for support.

Any thermoplastic sheet can be formed but certain ones are used more commonly, because of various properties they posses. The plastic sheet is manufactured or formed by extruded or calandered sheet.

3.1.4 Thermoforming Complexity

The complexity of the process is only 28%, while the resin does 72% of the work . Therefore, the selection of the resin is essential. Most of the problems in Thermoforming, encountered in sheet and film, is the mixture of regrind, additives,

and resin. If the mixture is not consistent, the processes will constantly be changing during the run of the product.

3.1.5 Temperature

The temperature control during Thermoforming is critical to achieve a consistently quality part. Proper mold temperature should be determined and maintained throughout the run. The hotter the mold, the more shrinkage, if the temperature is below what is required, excessive stress may be create in formed parts, producing negative results, such as warpage and lower impact strength.

Processing temperature ranges must be set for all the thermoplastic resins to avoid internal stress, warpage and degradation of formed part, see table 3.1.

The temperature parameters are as follows:

1- Mold and set temperature

2- Lower processing temperature

3- Orienting temperature

4- Normal forming temperature

5 -Upper limits

The set temperature is the temperature at which the thermoplastic sheet hardens and can be safely demolded. The closer the mold temperature can approach the set temperature and not exceed it, the less chance the molded part will have internal stress.

The lower process limit is the lowest temperature a mold can be without affecting the formed part with internal stress. If the mold reaches below the limit internal stress and warpage will result in the thermoformed part.

Orienting temperatures," biaxially orients the molecular structure of the thermoplastic sheet by 275% to 300% at these temperatures and then cooling greatly enhancing properties such as impact and tensile strength" (10).

The sheet must be oriented be for it is heated for forming. Because the forming temperature does not realign the molecular structure.

The temperature that must be reach before the part can be formed by vacuum is the normal forming temperature. This temperature is just below the degrading temperature.

The upper limit is the temperature at which the thermoplastic sheet would degrade. The sheet can only exceed above this temperature for only a very short time before it starts to decompose.

3.1.6 Vacuum

Vacuum pressure must also be consistent during the run. The minimum vacuum should be 20 inches of mercury and if it drops below that the Thermoformer should be shutdown until vacuum has been restored above 20 inches of mercury, see table 3.2 for pressure. The highest pressure obtainable from vacuum at sea level is 14.7 psi, see table 3.3. To attain this level, all vacuum systems should have rated pressure of 29 inches of Mercury (Hg). The faster the vacuum or at least 20 inches of mercury the better the material distribution, because the longer it takes to draw the heated extruded sheet or film in the mold, given its shape, the faster it will cool and it won't be able to form on the mold properly.

Table 3.1
THERMOFORMING PROCESSING TEMPERATURES, DEGREE

MATERIAL	MOLD AND SET TEMP	LOWER PROCESS LIMIT	ORIENT TEMP	NORMAL FORMING TEMP	UPPER LIMIT
ABS	185	260	280	300	360
Acetate	160	260	280	310	360
Acrylic	185	300	325	310	360
Acrylic/PVC	175	290	310	340	360
Butyrate	175	260	275	295	360
FEP	300	450	490	550	620
Polycarbonate	280	335	350	375	400
Polyester	170	250	275	300	330
Polyethersulfone	400	525	560	600	700
Polyethersulfone, glass filled	410	535	560	650	720
Polyethylene, high density	180	260	270	295	360
Propionate	190	260	270	295	360
Polypropylene	257	270	280	310-330	340
Polypropylene, glass filled	195	265	265	400	450
Polysulfone	325	375	415	475	575
Polystyrene	185	260	275	300	360
Vinyl, rigid	150	220	245	280-285	310
Vinyl,rigid foam	160	240	260	300	350

It is important that vacuum system is free of 90 degree elbows, from the surge tank to the mold, because each bend will reduce vacuum flow by 30%. A surge tank levels out short burst cycle pulsations. The tank should be located to the thermoformer as close as possible.

Psig = gage pressure

Psia = absolute pressure = 29.92 inches of Hg

Psig + atmosphere = Psia

1 inch of Hg = .4912 Psia of atmosphere

1 Psi = 2.036 inches of Hg

3.2 Extrusion

Is the process of continuously converting a soft material in a particular form. The cold plastic material (granular or powdered formed) is fed to the end of an extruder where the screw of the extruder squeezes the material, and with heat from external heaters and the friction of viscous flow , changes to a molten stream. As it does this it develops pressure on the material, which is highest right before the molten plastic enters the die. The screen pack, as shown in figure 3.11, consisting of a number of fine or coarse mesh gauges supported on a breaker plate and placed between the screw and the die, filter out dirt and unfused polymer lumps. The pressure on the molten plastic forces it through an adapter and into the die, which dictates the shape of the final extrudate molten plastic. A die with a round opening, produces pipe; a square die opening produces a square profile . Other continuous shapes , such as the film, sheet, rods, tubing and filaments, can be produced with appropriate dies.

In the sheet and film process the polymer melt is extruded through a slot die (T-shaped or "Coat Hanger" die), which may be as wide as 10 foot. The die has relatively thick wall sections on the final lands (as compared to the extrusion coating die) to

minimize deflation of the lips from internal melt pressure. The die opening may be .015 to .03 in for polyethylene. A sheet is considered thicker than .010 in, and a film is considered to be less than .010 in.

Table 3.2
VACUUM PRESSURES

Gage Press. psig	Absolute Press. Psia	Gag inche of Hg	Net press. on part, psi
0.0	14.70	0	0
-4.00	10.70	8.14	4.00
-8.00	.70	-16.30	-8.00
-9.82	4.8	-20.00	9.82
-12.8	2.42	25.00	-12.28
-14.24	.46	-29.00	-14.24
-14.70	0	-29.92	-14.70

Table 3.3
ATMOSPHERIC PRESSURES

Altitude feet	Absolute pressure psia	Gauge inches of Hg
Sea level	14.70	0
1000	14.20	1.0
2000	13.70	2.1
3000	13.20	3.1
4000	12.70	4.1
5000	12.20	5.0

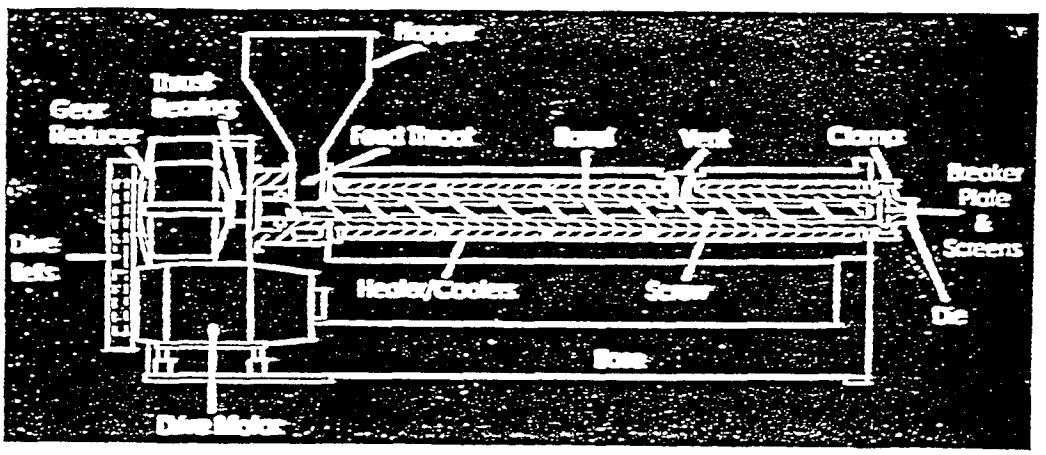

Figure 3.11 Schematic figure of Extruder
(Courtesy of Davis Standard)

CHAPTER 4
CHEMICAL RESISTANCE REQUIREMENTS

4.1 Solvent Resistance

The ability of a given plastic to retain an adequate properties when exposed to solvents is not a simple thing to research in available literature. This information must be supplied by the resin manufacture or by experiment.

The mechanism of chemical attach include chemical reaction, solvation, absorption, plasticization, and stress cracking.

4.1.1 Chemical Reaction

Chemical reaction involves direct chemical reaction of the agent along the polymer chain of the end of chain. Depending on the chemical, it can reduce physical properties, or even destroy the polymer. The reaction of chemical attach is accelerated by high temperatures.

4.1.2 Solvation, Absorption, and Plasticization

Solvents can effect the polymer by swelling and weight and dimensional changes. Also other properties such as strength stiffness, and creep resistance are affected.

4.1.3 Stress Cracking

The most common problem is stress cracking. For most polymer to fail when attack by a solvent, it doesn't have to be under stress. Failure rate is also dependent on stress level, surface roughness, sharp corners and polymer morphology.

Finding a complete list of all agents that causes stress cracking through literature is impossible, it can only be known through experimentation of the plastic environment.

4.2 Rinsing Agents

The machines used to wash the trays commonly use sodium hypo-chloride. This is bad for plastics. Many of the rinse agents or destainers are using sodium poborate. Rinse agents which are less active, that is using 10 to 12 percent solids, and therefore are less expensive, are less chemically injurious to the trays. More expensive rinse agents, which are 33% active, contain larger amounts of chemicals and surfactants, they will attack the trays more aggressively. Chlorine is a very aggressive agent against plastic. Those rinse agents which are highly caustic and highly alkaline are probably aggressive to the trays. Phenyl Thaline or any alkali are probably aggressive.

There are three types of rinse ejectors. One is hydraulic, two is electric, and three is paristolic. The three ingredients in rinse agents are iron, chlorine, and alkaline.

Rinse agents may be base or alkaline base.

4.2.1 Rinsing Agent Evaluation

Borg-Warner Chemicals, Inc did an evaluation on the effects of rinsen agents on food service trays. They compared BABYBLEND MJ-2500 and CYCOLAC ZA5 trays. The trays were subjected to a 5% solution of NJ6 Instant Dry at 180 deg F. at 90% R.H. and room temperature. The purpose of the latter evaluation was to determine whether the observed cracks were caused by the rinse agent or heat and moisture.

The conclusions were as follows:

1- NJ6 Instant Dry is a server stress cracking agent on both materials under the test conditions.

2- Both materials exhibited color fading, with CYCOLAC Z5 being slightly worse

3- Babyblend MJ-2500 appeared to crack earlier and more severely than CYCOLAC ZA5

4-CYCOLAC ZA5 samples exhibited localized swelling while Bayblend MJ-2500 swelled uniformly

5- The thermcycle test indicates that the cracking was not caused by the heat and moisture alone

4.3 Hot Water Aging of Polycarbonate

Hot water will deteriorate PC, as found through literature survey. It creates internal cracking and microvoids after it drys. The solubility of water in PC increases from about 3 % at room temperature to 6 % at 100 degs C. This effects PC mechanical's properties (3). Hot water is known to caused gradual degradation of the polymer above 60 degs C (4). The effects of hot water on PC are greater if the sample experience thermal cycling (5). The voids and cracks create by the hot water will cause the polymer to become brittle, losing its ductility.

If the polymer is exposed to boiling water, it will deteriorate in time due to chemical hydrolytic processes leading to degradation of molecular weight (6). Once the samples are in room temperature the cracking will close as water evaporates, but the visual healing process does not mean the restoration of the mechanical properties.

The size of the voids and the quantity of voids are difference from polymer to polymer due to the following:

1 - Additives

2 - Hydrolytic stabilizer

3 - Molecular weight

An experiment performed by M. Narkis, L. Nicolais, Apicella and Bell (13) on how microvoids effects mechanical properties and the healing and cracking of PC. They used molded samples:

1 - Lexan 143, 1 mm and 3 mm thick

2-Compression molded sheet, commercial 1mm and 3mm thick

The samples were placed in water at 100 degs C. The weight gain are shown in figure 4.1. The weight gains are a function of the square root of the time the sample was submerged in water, normalized for the thickness, corresponding to ordinary Ficklan diffusion. At first, M. Narkis noted that there was a gain which was the diffusion and saturation in the PC by the water. Later the gain maximizes and the gain drops. Narkis stated that this indicates degradation in the polymer. The maximum saturation time was the same, regardless of thickness and grade. But the injected molded piece showed a large number of disc- shaped fractures after only one hour, but the commercially sheet showed a few fractures after one day (13).

In fig 4.2 M. Narkis (13) shows a DSC curve of three samples of PC. The first sample is a virgin PC sample that has not been exposed to hot water. The second and third piece were submerged in boiling water for eight and thirty- seven days. The graph show that the longer the sample was exposed to boiling water the Tg will drop. Narkis stated that the drop in Tg may be the changes in averaged molecular weight occurring by the two opposing effects, namely, degradation and loss of molecular weight chains (13)

The longer the sample is submerged the higher will be the nuclei density, this will cause the size of the water pocket to be smaller, as shown in figure 4.3.

The most important results of the experiment showed the reduction of molecular weight. This will cause the deteriation of tensile properties as shown in figure 4.4.

The environment and the length of exposure of the material, as shown in figure 4.5, has great impact on yield strength . The test shows that the sample became very brittle after 3 days of exposure to boiling water. After 8 days the brittleness increased drastically.

Narkis tests indicated that once the sample is left to dry it appears that material microvoids and stress cracks are visually healed, but the mechanical properties still have deteriorate.

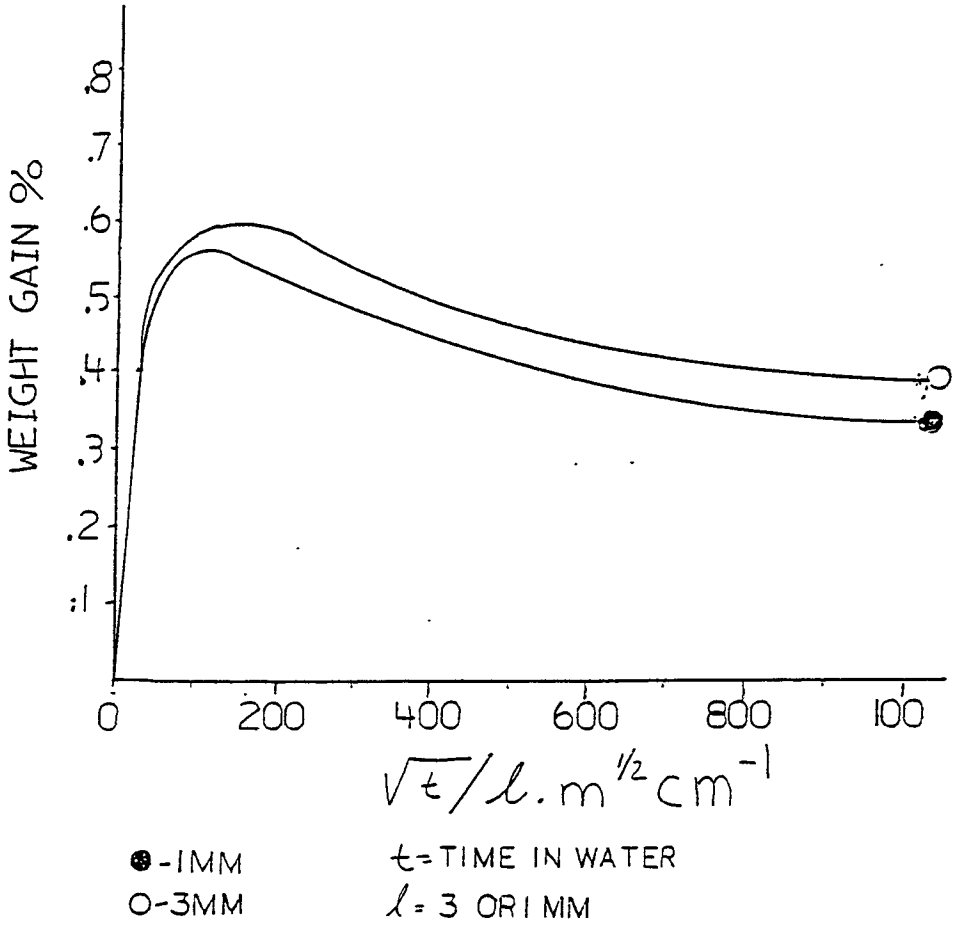

Figure 4.1 Water Sorption of PC
Liquid water sorption of behavior of PC sheets of different thickness.
(dark circle refers to 1mm sample and light circle refers to 3mm sample)

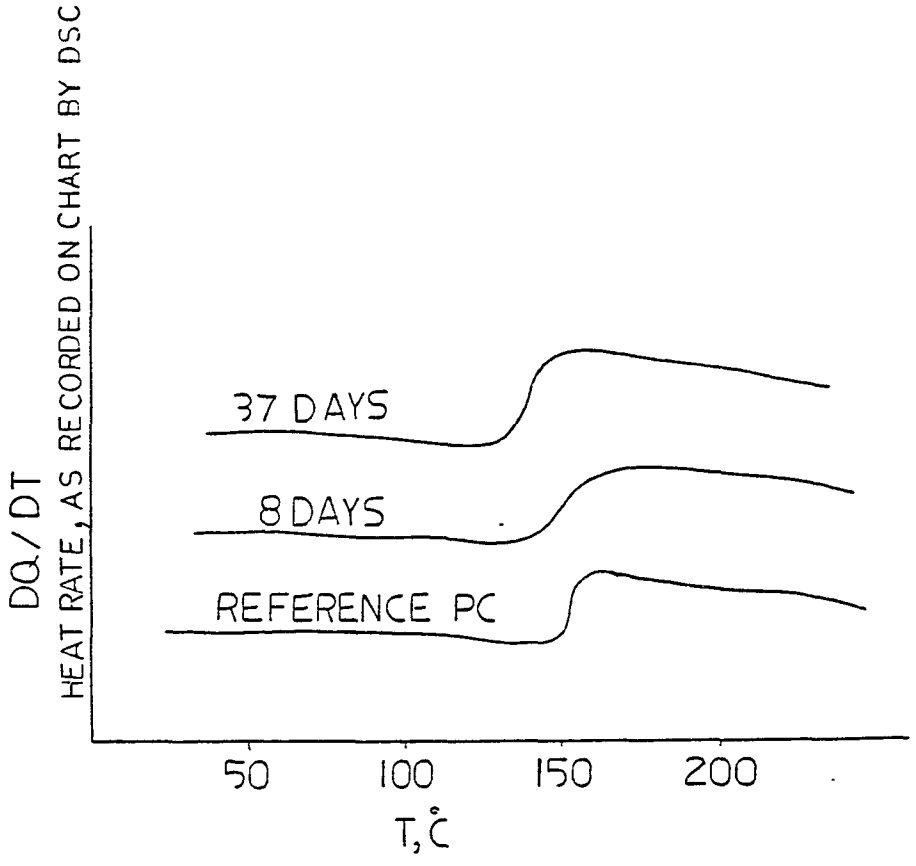

Figure 4.2 Differential scanning calorimetry (DSC) of samples in boiling water

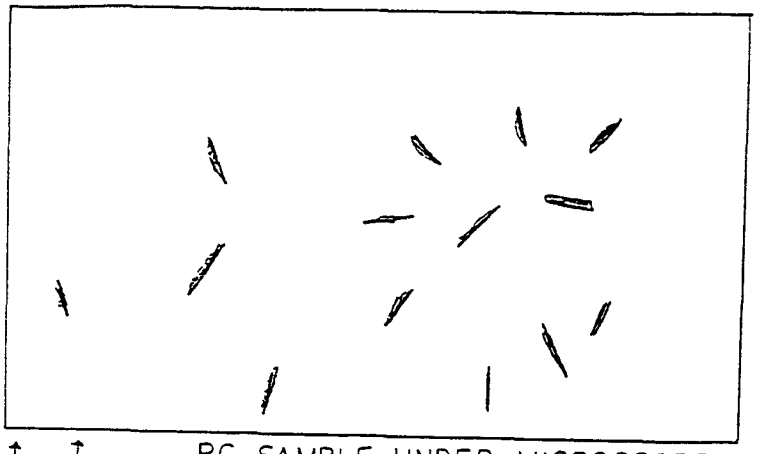

PC SAMPLE UNDER MICROSCOPE

DISC SHAPE CRACKS AFTER 8 DAYS IN BOILING WATER, AND STORED IN WATER 4 DAYS, RM TEMR

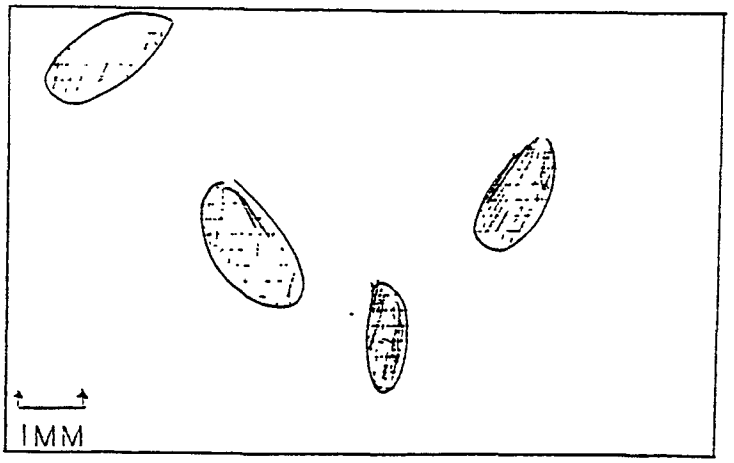

PC SAMPLE UNDER MICROSCOPE

Figure 4.3 Polycarbonate samples in boiling water for 8 and 5 days

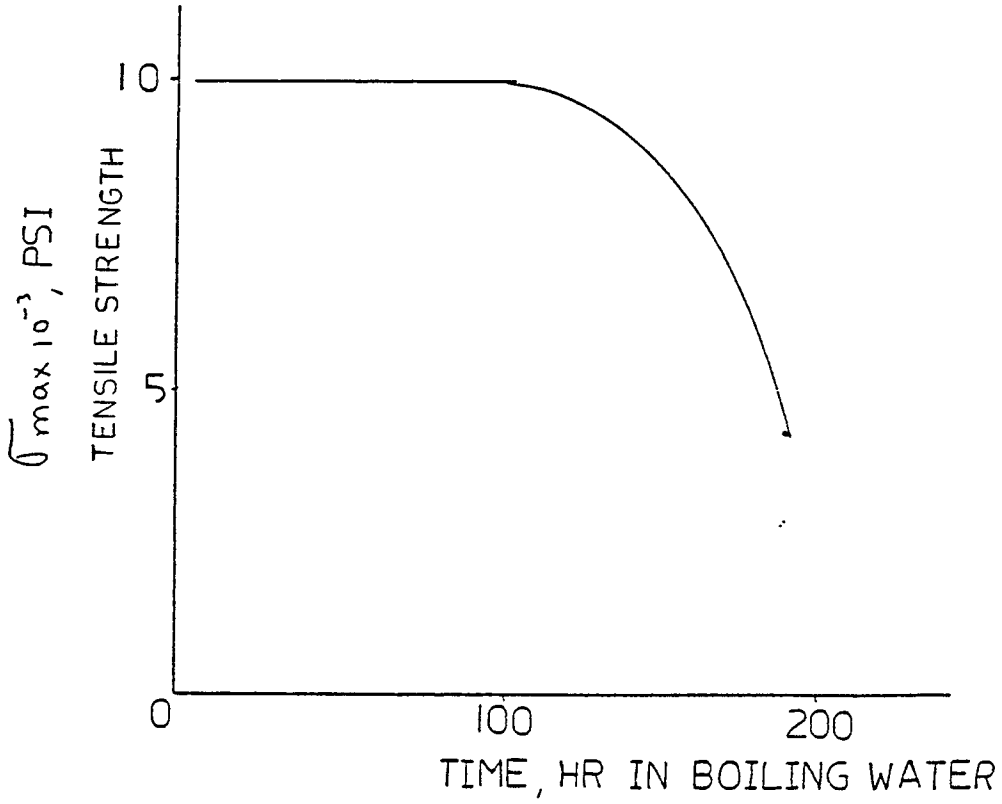

Figure 4.4 Tensile Strength of Polycarbonate samples in boiling water

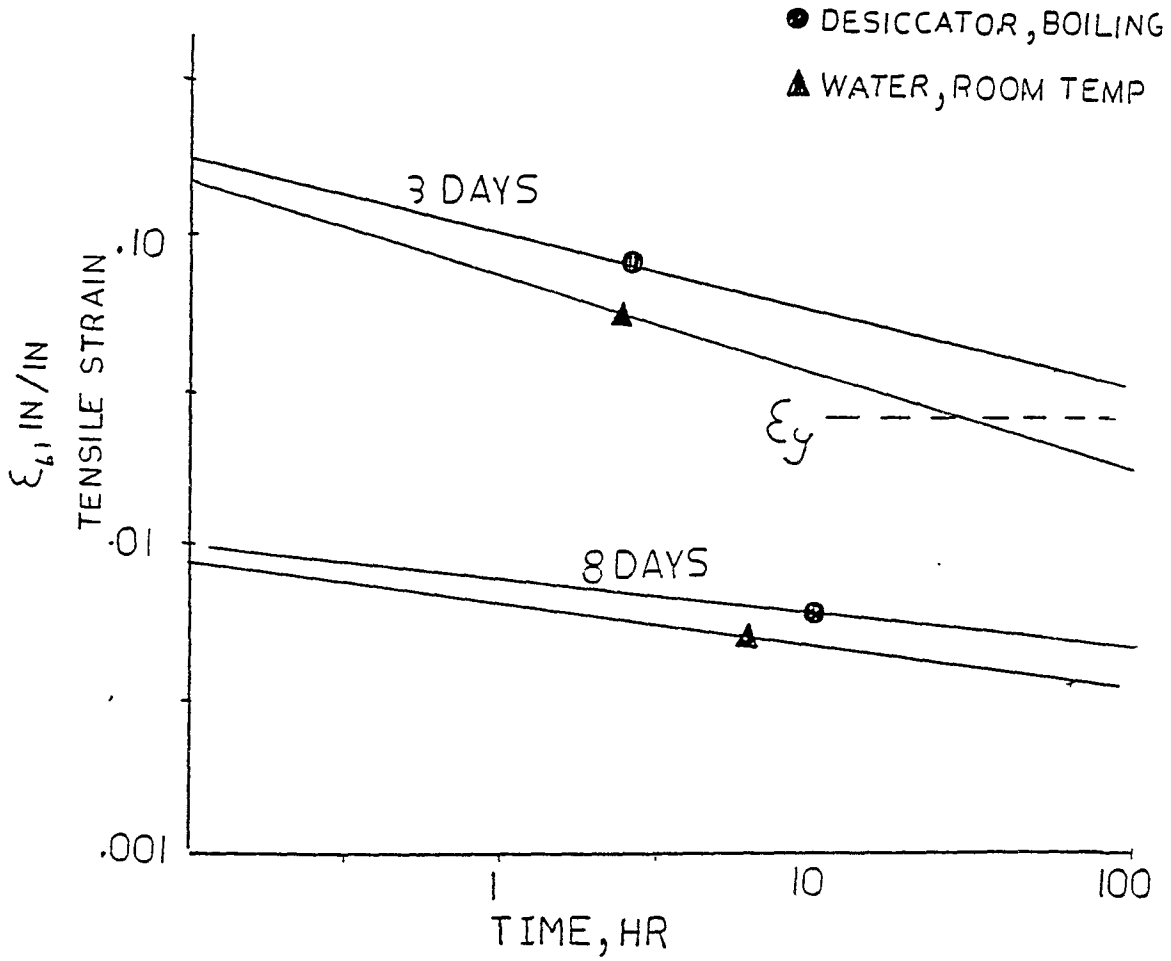

Figure 4.5 Polycarbonate samples in water, strain curve

CHAPTER 5
RECYCLING ABS/PC BLEND

5.1 Regrind

The trays used in the food service industry may produce as much as 20% of it weight in scrap, from the trimming operation. This scrap is thrown into a granulator, to be reduce to pellet size. Later the regrind is blended with the unprocessed resin or virgin material and extruded to form a sheet of ABS/PC. Therefore, no waste is created during the thermoforming process. In most cases, the mixture of virgin resin to regrind is the same amount of regrind produce during the process. But on occasions this ratio may increase if a large inventory of regrinds has built up.

One possible reason for having a high inventory of reginds or recyclable material may be due to a rejected shipment by the customer or if the thermoformer is not correctly set and starts to producing defected parts. The manufacture will then try to regain some of his lost by increasing the ratio of regrind to virgin, despite the fact that the quality of his product may suffer from using a higher ratio of regrind to virgin.

The recycle material will experience some degradation due to the high temperature and shearing stress experience during reprocess. The shear stresses during the reprocess and could cause different type of degradations. The reaction may affect the chemical structure and influence the mechanical properties.

Since the trays are a blend of ABS/PC the recycling may affect various properties more than an monophasic material. The reprocessing will affects ABS more so than PC, as previously studies have indicated PC is not affected that much because it is a stable thermoplastic resin.

5.2 Properties

A study on how reprocess ABS/PC blend affects the physical properties were

performed by J.I. Eguiazabal and J. Nazabal.

Their results were compared to those found with ABS and PC. Their test indicates that during the reprocess, ABS will experience oxidative degradation of the butadiene units, and also crosslinking reaction will take place during the reprocessing, the butadiene becoming much less rubbery. (14) The Youngs modules and yield strength remained unchanged to the amounts of reprocessing, following a behavior similar to that found for other polymers.

The break properties were effected by reprocessing, as shown in figure 5.1. When a blend of ABS/PC by Bayblend is compared with PC and ABS, in which, ductility is measured as elongation at break (14). The blend looses its ductility more so than ABS and PC after 2 recycling.

The tensile strength, in figure 5.2, shows similar results in Eguiazabal tests (14) that ABS/PC blend degrades rapidly after 2 cycles. The slight increase in ABS tensile strength is observed after five processings. Eguiazabal states that it is due to the degradation of the PBD segments, cross- linking. The degradation in the blend may be the variation in its structure.

The toughness of the ABS/PC blend will also be alter by reprocessing, as shown in Eguiazabal curve, figure 5.3. The toughness was measured by notched impact strength. The blend`s Impact strength as shown, has decreased rapidly after 3 cycles. Eguizabal believed that " the behavior of the blend may be affected by the increase of the Tg of PBD due to cross-linking. Which can have a significant influence on the impact strength given the proximity of the test temperature to the ductile-brittle transition of PBD".(14)

In Eguiazabal test the Melt Flow Index of Babyblend increased significantly after three reprocessings, figure 5.4. The more the material is process the more fluid it becomes. The increase in fluidity is attributed to the decrease in molecular weight of the polymer (7, 8, and 9).

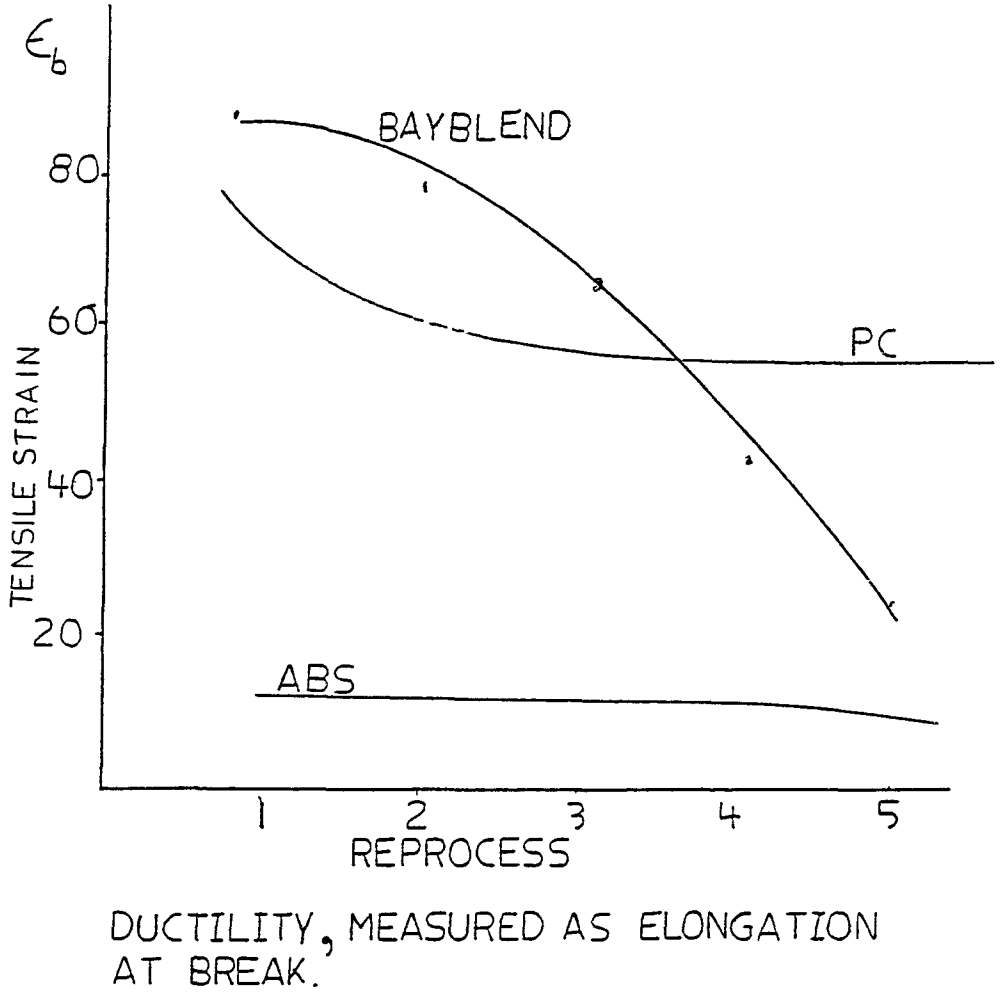

Figure 5.1 Ductility, measured as elongation at break

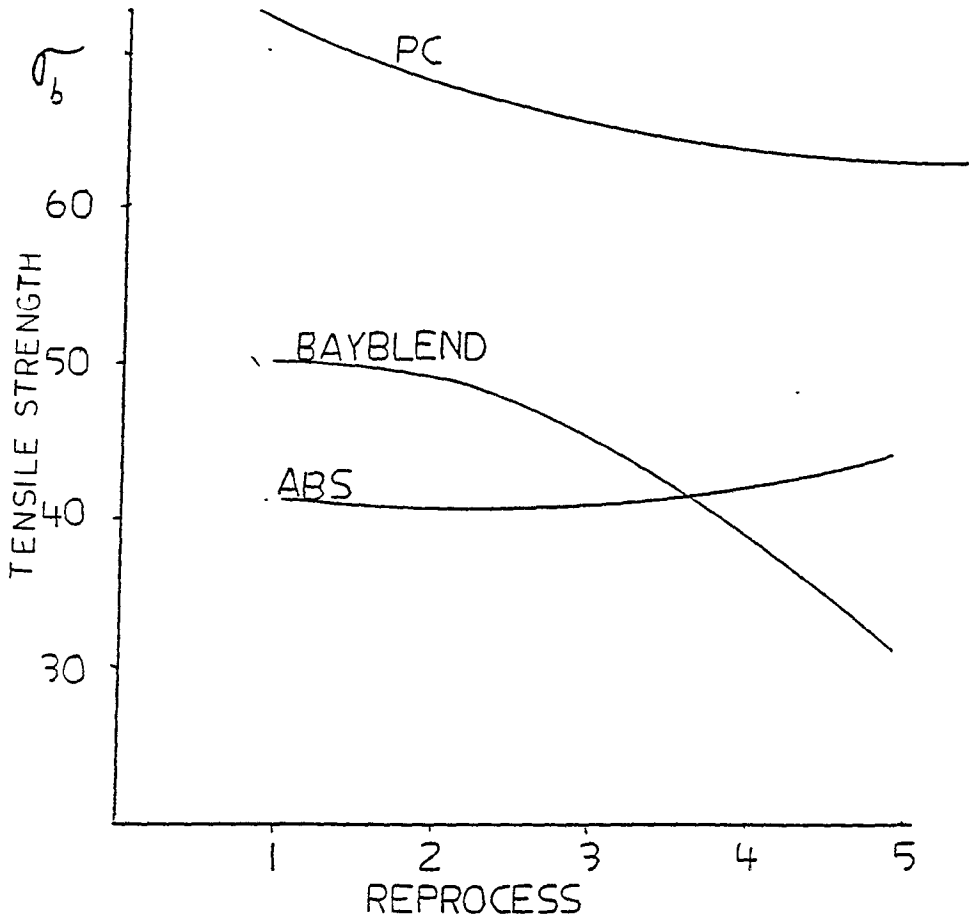

Figure 5.2 Tensile strength of ABS, PC and Bayblend

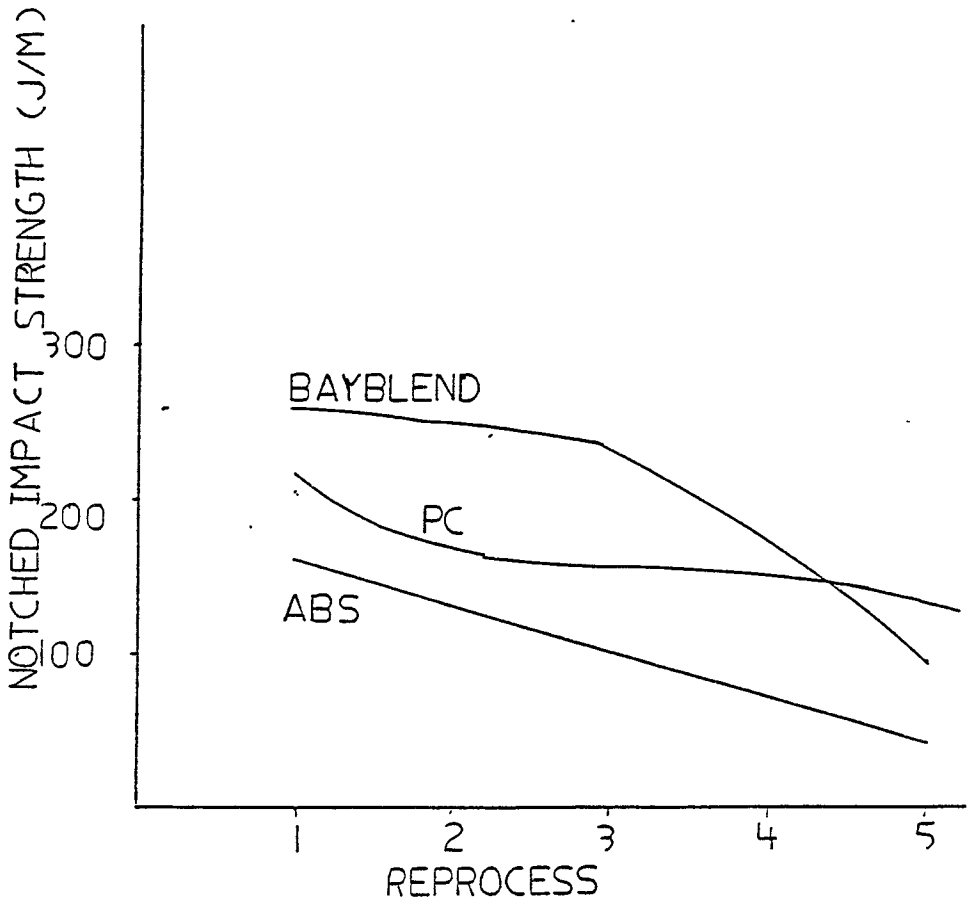

Figure 5.3 Notched Izod Impact strength of ABS, PC, and Bayblend

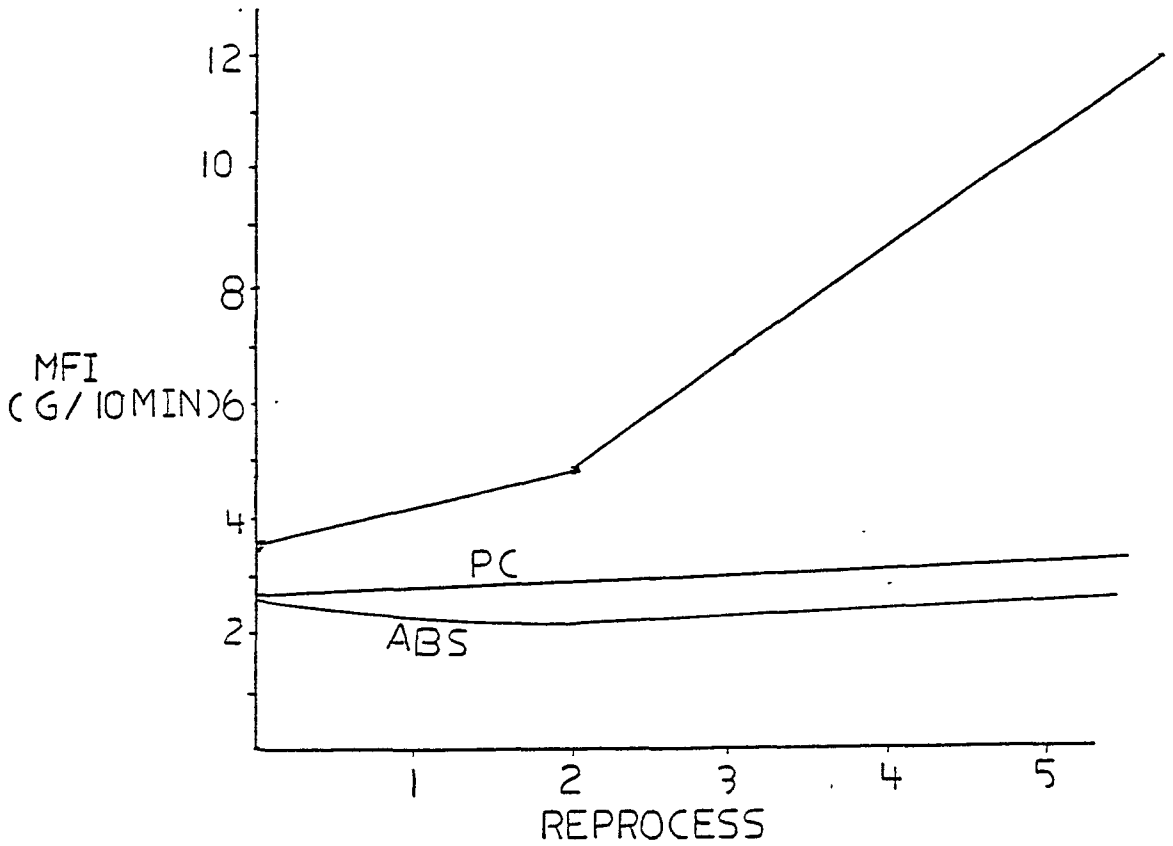

Figure 5.4 Melt Flow Indices of ABS, PC, and Bayblend

CHAPTER 6
DISCUSSION

6.1 Resin Comparative Analysis

The trays, as shown in figure 6.1, are made from a blend of ABS/PC resin from Bayblend, TM 85MN or MC 2500. The combination of ABS/PC provides the desirable properties of an engineering polymer and the cost of a commodities polymer.

ABS is a terpolymer, it is made up of three building blocks: acrylonitrile, butadiene, and styrene. It is an amorphous thermoplastic and hygroscopic material which means it must be dried before it is extruded. ABS is easily process, given a wide window in operating conditions.

PC is also an amorphous thermoplastic and hydroscopic. It has excellent toughness, clarity, and high-heat deflection temperature. It is considered to be one of the most durable plastics. But, PC will degrade when exposed to chemicals.
The property data sheets list their ASTM test methods' results that can be used in comparison with other blends or how the blend's properties differ from the properties ABS and PC as shown in table 6.1.

In reviewing the ASTM test results, as predicted, Polycarbonate exhibits greater strength and heat resistance when compared to the ABS/PC blend and ABS. But the cost of PC is much greater. PC is between $1.54 and $1.59 per pound for 40,000 pound truckload orders at annual volumes between 200,000 pounds and 300,000 pounds, Plastic News of February, 1992, compare to the cost of ABS/PC blend, between $1.29 and $1.55 a pound. The cost of ABS is between $1.03 and $1.36 a pound. Therefore the blend of ABS/PC provides a bridge between the high performance of Polycarbonate and the cost of ABS.

6.2 Process Evaluation

The trays are formed by a Cut-Sheet Thermoformer, as described in Chapter 3, in a multi-station rotary systems. Sheets of ABS/PC are heated in an oven and then are placed in the multi-station thermoformer were the trays are formed.

All scrap parts or defected trays are thrown into a grinder to be reprocess into sheets, therefore, there is no waste in production. The ratio of regrinds to virgin ABS/PC is subject to change, dependent on the amount of regrinds left. The ABS/PC blend is dried for four hours at 250 degs F before it is extruded into sheets. If the resin is not fully dried, the sheet will appear with bubbles, indicating moisture in the sheet.

6.3 Environment

The trays ability to withstand its environment presently is inconsistent, between one and three years. The trays are subjected to high temperatures in water with harsh solvents. The blend is able to withstand high temperatures for only a short duration of time, as discussed in chapter 3. Since the cleaning of the trays takes less than two minutes the cleaning temperature of the cycle should not deter the life of the tray significantly. But the exposure to the rinsing agents may curtail the life of the trays as the test performed by Borg- Warner Chemicals proved that the solvent or rinse agent used to clean the trays will cause severe stress cracking, as shown in figure 6.2

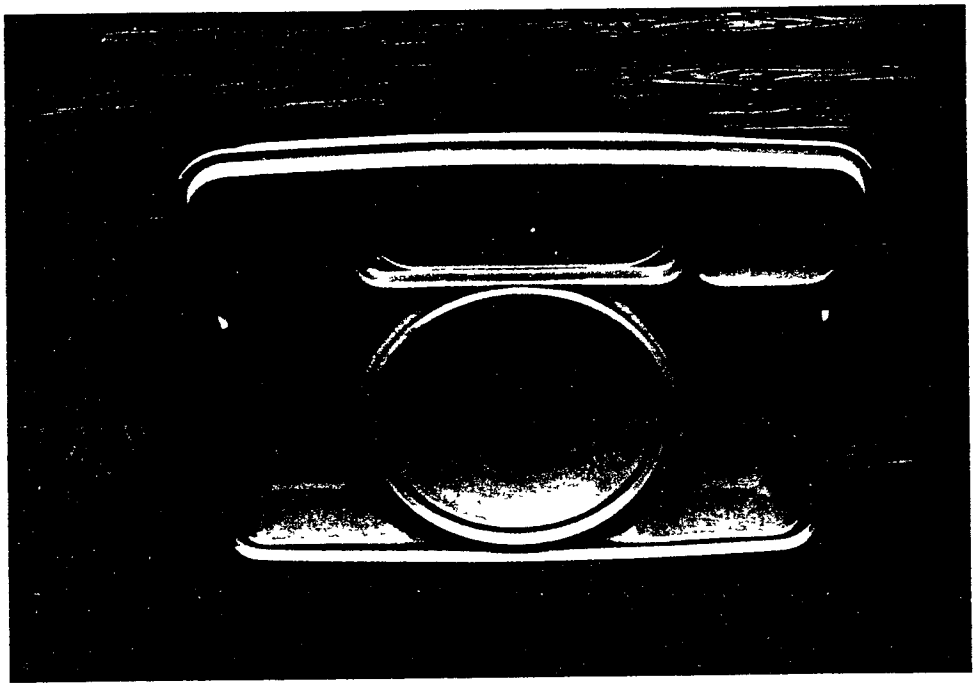

Figure 6.1 Thermoformed Tray, as used in hospitals and correctional facilities.

Table 6.1 Comparison Table of ABS/PC, PC and ABS

Property	ASTM	T 85 MN	MC 2500 (Bayblend)	PC (Makrolon)	ABS
Tensile Strength @ yield	D 638 lb/insq	8,000	8,500	9,300	5,500
@ break	D 638	7,200	,300	10,500	6,000
Flexural Strength	D 790 lb/insq	1,600	13,000	12,500	12,000
Flexural Modulus	D 790	320,000	350,000	330,000	
Izod (.125in)	D 256	11.2	0.5	18	6
Thermal @264 psi deg F	D 648	230	240	270	190-225
@ 66 psi		265	250	287	210-245

CHAPTER 7
CONCLUSIONS

The thermoformed trays used in correction facilities and in hospitals are in service until they exhibit stress cracking, between one to three years. The stress cracks observed are the result of the following:

1. Improper temperature setting creating internal stress, during thermoforming process
2. The rinsing agent used in cleaning the trays chemically degrades the trays
3. The hot water used in cleaning the trays weakens the physical properties
4. The amount of regrind or recycle blend used in the process influences the process

The thermoforming process is the simplest of all the other process, and ABS gives a wide window for temperature setting. Therefore, the effect of the process allows some room for error in temperature setting, because resin does 72% of the work while the process does only 28% of the work.

The rinsing agent used to clean the trays combined with hot water, over 200 degrees Fahrennheit, will create microvoids and stress cracks on the trays, as shown in figure 4.3. These microvoids and stress cracks will visually heal once the trays are cooled , but the mechanical properties still have deteriorated, as shown in figure 4.4. The tensile strength of Polycarbonate in the alloy blend will decrease drastically when exposed to boiling waters for a long period of time.

The results from the Borg-Warner test concluded that the more expensive the rinsing agent the more aggressive the chemicals that will attack the trays, as discussed

in Chapter 3. The rinsing agents used in cleaning the trays contain sodium hypo chloride, sodium poborate which are very harmful to the tray.

The recycling of the blend effected mostly ABS. ABS experienced oxidative degradation of the butadiene units, the butadiene became much less rubbery. The ABS/PC blend tensile strength degraded rapidly after 2 cycles when compared to ABS and PC.

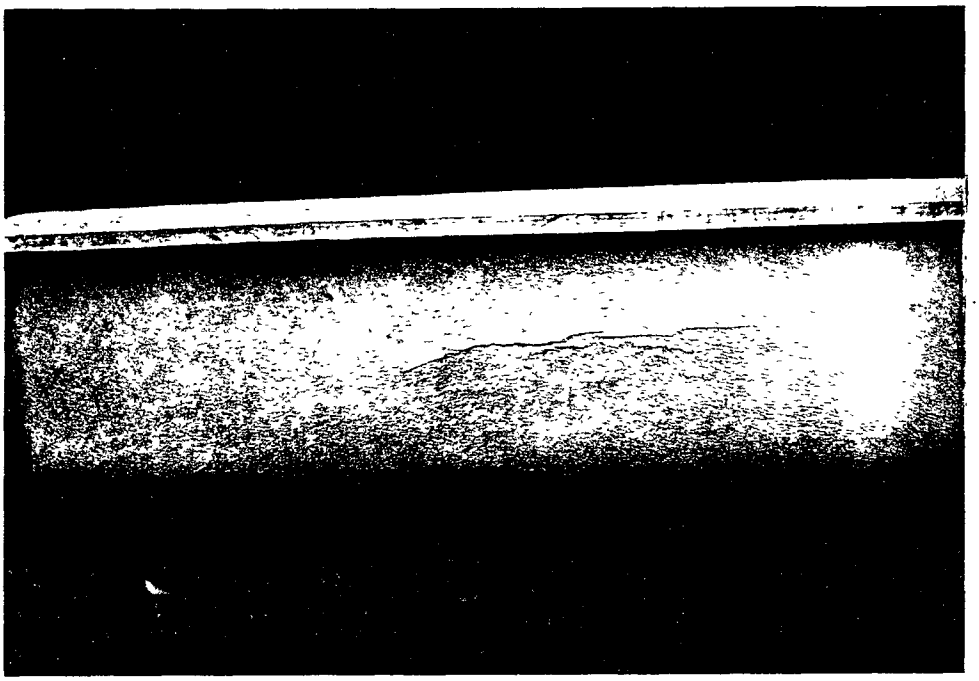

Figure 7.1, Stress cracking in tray

REFERENCES

1. Carley, J."A Plastic Primer."*Modern Plastic*. Mid Oct (1989):4-5.

2. Thomas, L.S. "Polycarbonate."*Modern Plastic*. Mid Oct (1991): 44-45.

3. Yokouchi, M., and Kobayashi,Y. "Effect of Heat Pretreatment and Strain Rate on Tensile Properties of Polycarbonate Sheet. *Journel Applied polymer Science*. 26 (1981):431.

4. Bayer Engineering Plastics."Makrolon Polyarbonate." Edition 8 (1979).

5. Narkis, M., and Bell, J.P. "An Unusual Visual Microcracking/Heating Phenomeenon in Polycarbonate at Room Temperature."*Journal of Applied PolymerScience*. (1982): 2809.

6. Gardner, R.J., and Martin, J.R. "Humid Aging of Plastic: Effect of Molecular Weight on Mechanical Properties and Fracture Morphology of Polycarbonate."*Journal of Applied Science*. 24(1979): 1269.

7. Abbas, B. "Reprocessing of Thermoplastics. ll. Polycarbonate."*Polymer Engineering Science*. 27 (1980): 376.

8. Kalfoglou, N.K., and Chaffey, " Effects of Extrusion and Properties of High-Impact Polystyrene."C. E. *Polymer Engineer Science*. 194 (1979): 552.

9. Mondragon, I., and Nazabal, J. *Revista de Plasticos Modernos*. 345 (1985): 328.

10. McConnell, W."The Seven Fundamentals of Thermoforming." *Plastics Engineering*. December (1990).

11. Brisimtzakis, A. "ABS." *Modern Plastic*. (1991):90.

12. Arrnold, L.K. *Introduction to Plastic*. Iowa State University Press, Ames, Iowa (1968):4.

13. Narkis, M., "Hot Water Aging of Polycarbonate." *Polymer Engineering and Science*. 24 (1984): 211.

14. Eguiazabal, J., and Nazabal, J. "Reprocessing Polycarbonate/Acryonitrile-Butadiene-Styrene Blends: Influence on Physical Properties." *Polymer Engineering and Science*. 30 Mid-May (1990):527.